INDEX

INDEX _____ PAGE A

HARNESS ARRANGEMENT _____ PAGE B

CABLE ARRANGEMENT _____ PAGE C

CIRCUIT BREAKER CODE _____ PAGE D1 & D2

CONNECTOR CODE _____ PAGE E1 TO E6

DIODE CODE _____ PAGE F

RELAYS CODE _____ PAGE G

RESISTOR CODE _____ PAGE H

SWITCH CODE _____ PAGE I

TELL-TALE LITE CODE _____ PAGE J

ACCESSORIES SYMBOL _____ PAGE K

WIRING DIAGRAM INDEX _____ PAGE L

SPARE WIRES _____ PAGE M

WIRING DIAGRAM _____ PAGE 1 TO 24

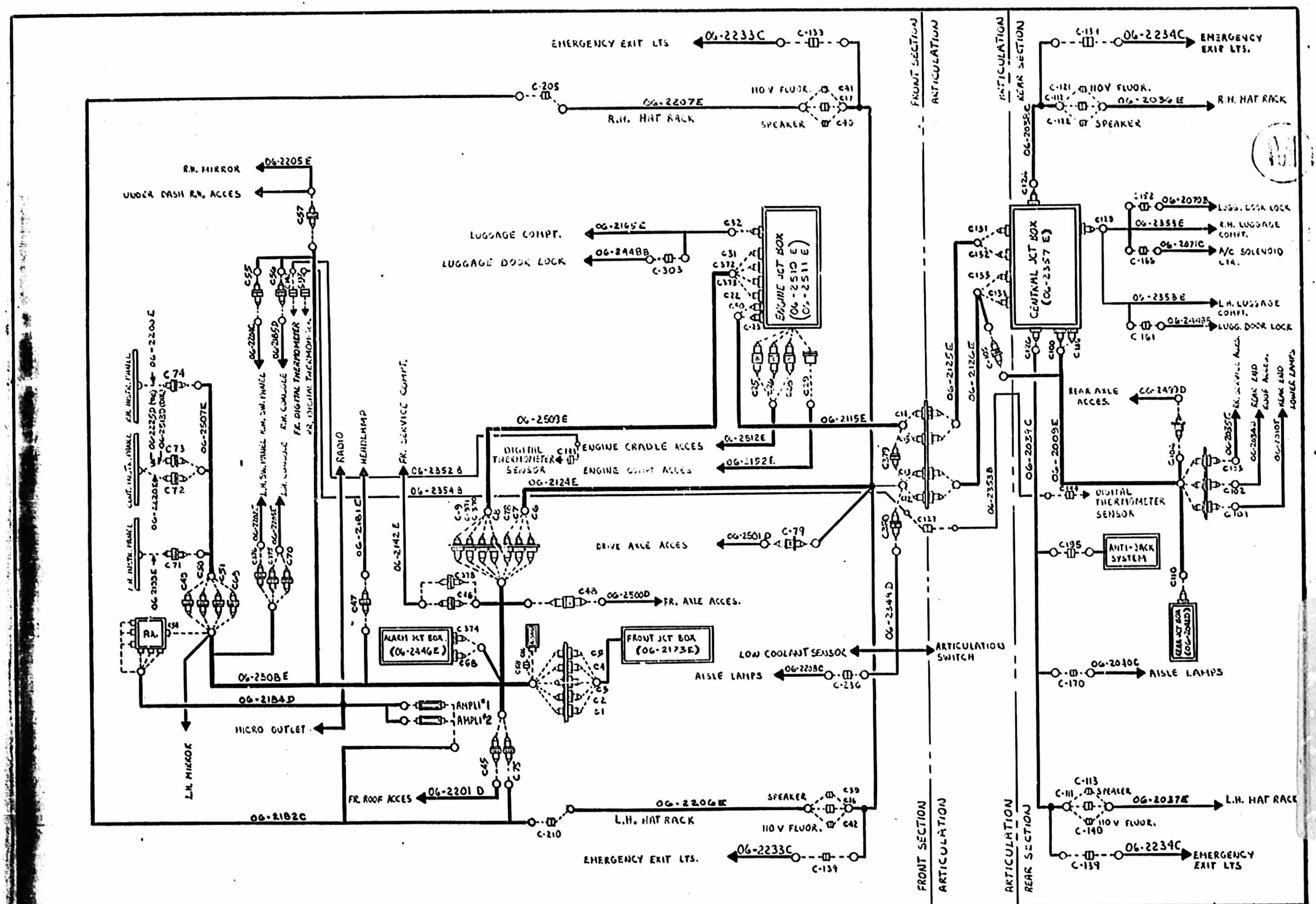

LEGEND	
FRONT JUNCTION PANEL	BATTERY JUNCTION BLOCK
REAR JUNCTION PANEL	SINGLE CONNECTOR
BATTERY COMPARTMENT	DIODE (RESTRICTOR)
CIRCUIT BREAKER	OPTION
HARNESS CONNECTOR	

ITEM	DATE	REVISION	PAR
C	91-02	MISE A JOUR	ML
B	03-89	CD# 16260	ML
A	03-88	ETAIT /J008	B.C

DESC : HARNESS ARRANGEMENT

DESS: D.V. | DATE- 88-02

VER.- CC | APPR.-

APPL: EFF. W/J009 ⚠ PRIOR L033 | REF: H5·60 | NO: D-060660 | p. B | C

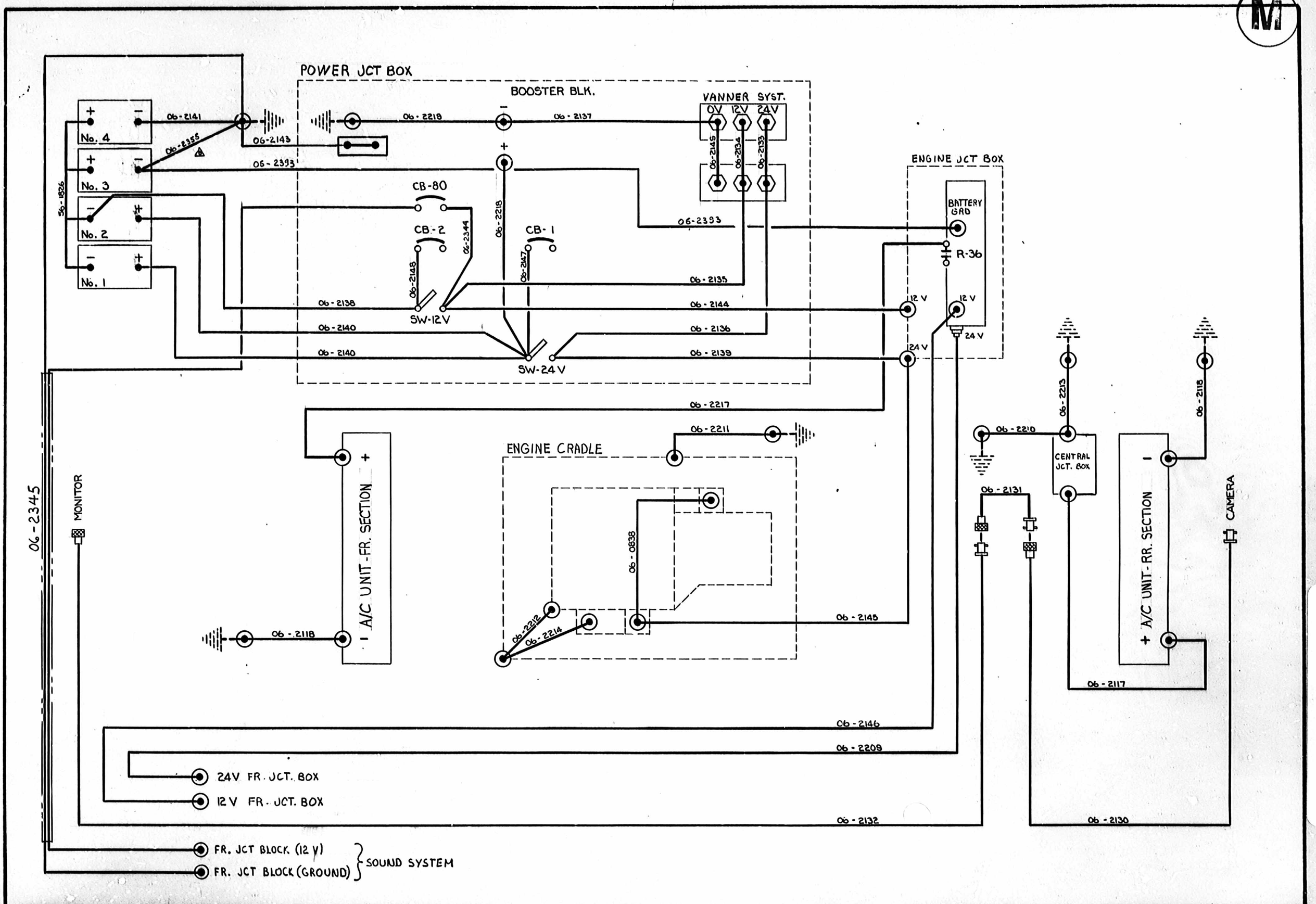

BREVOSTA

LEGEND

- FRONT JUNCTION PANEL
- REAR JUNCTION PANEL
- BATTERY COMPARTMENT
- CIRCUIT BREAKER
- HARNESS CONNECTOR
- BATTERY JUNCTION BLOCK
- SINGLE CONNECTOR
- DIODE (RECTIFIER)
- OPTION

ITEM	DATE	REVISION	PAR
C	88-05	MISE A JOUR	B.C.
B	88-03	MISE A JOUR	B.C.
A	88-03	ETAIT /J008	B.C.

DESC.: CABLE ARRANGEMENT

APPL.: EFF. W/J009

REF.: H5-60

DESS.: D.Y.

DATE: 88-02

VER.: -

APPR.: -

NO: D-060660 p. C

C

CIRCUIT BREAKER CODE

CIRCUIT BREAKER					
CB#	AMP.	VOLT.	DIAG. PAGE	LOCATION	FUNCTION
1	30	24	1	POWER JCT. BOX	24 V HOT WIRE
2	30	12	1	"	12 V HOT WIRE
3	90	24	1	ENG. JCT. BOX	24 V FEED FRONT JCT. BOX
4	70	24	1	"	24 V FEED CENTRAL JCT. BOX
5	70	12	1	"	12V FEED FRONT JCT. BOX
6	8	24	1	FR. JCT. BOX	FEED MASTER SWITCH
7	8	24	1	ENG. JCT. BOX	ENGINE - RR START SW. & SERV. LT.
8	8	24	1	"	RR ENGINE CTR SW
9	8	24	1	FR. JCT. BOX	WEBASTO SW.
10	15	24	1	ENG. JCT. BOX	WEBASTO
11	20	12	2	"	ECM (DDEC II)
12	20	12	2	"	ECM (DDEC II)
13	5	12	3	"	ECU (ATEC)
14	8	12	3	"	ATEC CTR
15	10	12	3	"	BACK-UP ATEC CTR
16	8	24	4	FR. JCT. BOX	ALARM BUZZER & INSTRUMENT
17	10	24	4	"	ELECT. HORN
18	5	24	4	"	FIRE ALARM
19	5	12	4	"	12V VOLTMETER
20	5	24	4	"	FOG LT SW
21	15	12	4	"	FOG LT
22	20	12	4	"	HEADLAMP (HI)
23	15	12	4	"	HEADLAMP (LO)
24	5	24	5	"	HEAD LAMP SW & MULTI-FUNC. SW
25	10	24	5	"	MULTI-FUNC. SW. (WIPER, WASHER)
26	20	12	6	"	FLASHER & HAZARD UNIT
27	15	24	7	ENG. JCT. BOX	FRONT BAGGAGE LT.
28	15	12	5	CENT. JCT. BOX	REAR ID TAIL & LICENCE LT
29	8	12	5	"	REAR CLEARANCE LT
30	8	12	5	"	REAR TAIL & MARKER LT
31	5	12	5	"	LICENCE PLATE LT
32	15	12	5	"	STOP LT
33	5	24	7	FR. JCT. BOX	STOP LT SW
34	5	24	7	"	PARK BRAKE SW.

CIRCUIT BREAKER					
CB#	AMP.	VOLT.	DIAG. PAGE	LOCATION	FUNCTION
35	8	12	7	FR. JCT. BOX	FR. CLEARANCE LT.
36	5	24	8	CENT. JCT. BOX	EXIT LAMP
37	8	12	7	FR. JCT. BOX	FR. SECTION MARKER LT.
38	15	24	7	CENT. JCT. BOX	RR BAG. COMP'T LT.
39	5	24	8	FR. JCT. BOX	" FR SERV. COMP'T LT.
40	5	110	9	ALARM JCT. BOX	110 V. FLUOR - RR
41	5	"	"	"	110 V. FLUOR. - FR. RH
42	15	24	"	ENG. JCT. BOX	FRONT FLUORESCENT (24V)
43	8	24	"	FR. JCT. BOX	HAT RACK LTS SW
44	15	"	"	ENG. JCT. BOX	FRONT READING LTS - RH.
45	15	"	"	"	" " " - LH.
46	8	"	"	CENT. JCT. BOX	REAR " " - RH.
47	8	"	"	"	" " " - LH
48	10	"	9	ENG. JCT. BOX	FRONT GENERAL LTS.
49	10	"	10	FR. JCT. BOX	DASH LT REOSTAT & U/SEAT LT.
50	8	"	"	"	DASH LT REOSTAT
51	10	"	"	"	U/SEAT LT
52	5	"	"	"	PASS. & HOSTESS CHIME SW
53	8	"	11	"	A/C & HEAT SW.
54	8	"	11	ENG. JCT. BOX	A/C LOGIC PANEL
55	5	24	13	FR. JCT. BOX	DRIVER'S HTR FAN SW. IGN. CTR.
56	15	24	"	ENG. JCT. BOX	REAR WATER PUMP
57	15	"	"	"	FRONT WATER PUMP
58	8	"	"	"	A/C COMPR. CLUTCH & COND. FAN SOL.
59	90	"	"	"	FRONT EVAP. FAN MOTOR
60	40	"	"	F.E.F.M.	" " " " RH
61	40	"	"	"	" " " " LH
62	90	"	"	ENG. JCT. BOX	REAR EVAP. FAN MOTOR
63	40	"	"	R.E.F.M.	" " " " RH
64	40	"	"	"	" " " " LH
65	5	"	"	ENG. JCT. BOX	HUMIDISTAT CTR.
66	10	"	"	FR. JCT. BOX	DRIVER'S HTR FAN SW
67	8	24	14	"	REAR VIEW MIRROR
68	15	12	14	"	DRIV. WINDOW LIFTER & CIGAR LIG

PREVOST

LEGEND

- FRONT JUNCTION PANEL
- REAR JUNCTION PANEL
- BATTERY COMPARTMENT
- CIRCUIT BREAKER
- HARNESS CONNECTOR
- BATTERY JUNCTION BLOCK
- SINGLE CONNECTOR
- DIODE (RECTIFIER)
- OPTION

THIS DOCUMENT IS THE EXCLUSIVE PROPERTY OF PREVOST CAR INC. IT CANNOT BE USED FOR ANY OTHER PURPOSE OR REPRODUCED IN WHOLE OR IN PART, NOR SHOWN TO OTHERS OR ANY PERSON OR COMPANY SAVE WITH THE EXPRESS CONSENT IN WRITING FROM PREVOST CAR INC.

ITEM	DATE	REVISION	PAR
D	88-05	CB41 & CB65 ETAIT 8A	MA
C	88-05	CB27, CB38 & CB39 ETAIENT 10A	MA
B	88-03	MISE A JOUR "FUNCTION"	B
A	88-03	ETAIT /J008	B.C.

DESC : CIRCUIT BREAKER CODE

DISS: D.T. | DATE - 88-02 | VER. - | APPR. -

APPL: EFF. W/ J009 △ | REF: H5-60 | NO: D-060660 | p. D1 | C

CIRCUIT BREAKER CODE

CIRCUIT BREAKER					
CB#	AMP.	VOLT.	DIAG. PAGE	LOCATION	FUNCTION
69	5	24H	16	FR. JCT. BOX	TACHOGRAPH CLOCK
70	3	24i	16	"	LOW FUEL SENSOR & TTLT
71	8	24	16	CENT. JCT. BOX	TOILET PUMP
72	8	"	"	"	TOILET LTS
73	"	"	"	"	TOILET FAN
74	10	24i	17	FR. JCT. BOX	UPPER WIND. DEFROST
75	10	24	15	"	L.H. CONSOLE SWITCH
76	10	"	17	"	UPPER WIND. WIPER & WASHER
77	8	"	18	"	RR & FR DOOR CONTROL
78	3	12i	3	"	RETARDER SW.
79	8	24	18	CENT. JCT. BOX	RR CTR DOOR
80	30	12	21	POWER JCT. BOX	SOUND SYSTEM
81	16	24	19	FR. JCT. BOX	FR E.C.U. ANTI SKID
82	16	"	19	"	" " "
83	5	"	19	"	" " "
84	70	12	1	ENG. JCT. BOX	CENTRAL JCT BOX
85	8	24i	8	ENG. JCT. BOX	HATRACK COMPT. LT.
86	5	24	21	FR. JCT. BOX	FEED KNEELING SYSTEM
87	5	24i	21	ENG. JCT. BOX	ARTICULATION SW
88	8	24	22	FR. JCT. BOX	ARTICULATION BRAKE
89	8	24i	"	ENG. JCT. BOX	AIR DRYER
90	5	"	22	FR. JCT. BOX	BACK UP MONITOR CONVERTER
91	8	24i	18	FR. JCT. BOX	SPEED LIMITER SW.
92	"	24i	22	FR. JCT BOX	DRIVER'S SEAT HEATER & DIG. THERM.
94	10	12	23	FR. JCT. BOX	LUGGAGE DOOR LOCK
95	15	12	24	"	RADIO
97	5	24	16	CENT. JCT. BOX	AISLE LTS.
98	10	12	7	"	BACK-UP LIGHT & BACK-UP ALARM
99	"	"	7	"	BACK-UP LT
100	8	24	9	"	GENERAL LT - REAR SECTION
101	5	"		"	24V FLUOR LT - REAR SECTION
102	5	12i	22	"	CAMERA HEATER
103	5	12	16	"	LAV. NIGHT LIGHT
105	5	110	9	ALARM JCT. BOX	110-V FLUORESCENT - FR. L.H.

CIRCUIT BREAKER					
CB#	AMP.	VOLT.	DIAG. PAGE	LOCATION	FUNCTION
106	5	110	23	ALARM JCT. BOX	WATER HEATER TANK
107	20	110	23	"	ENGINE BLOCK HEATER
108	3	24	3	ENG. JCT. BOX	RETARDER ATEC CTR
109	10	12	6	FR. JCT. BOX	CORNERING LTS
110	15	12	24	"	AUDIO. AMPLI - FR. SECT.
111	15	12	24	"	" - RR SECT.
112	5	24	15	FR. JCT. BOX	FR. DESTINATION SIGN
113	20	24	23	CENT. JCT. BOX	LH LUGGAGE DOOR LOCK - RR
114	20	24	23	"	RH LUGGAGE DOOR LOCK - RR
115	25	24	23	ENG. JCT. BOX	FR. LUGGAGE DOOR LOCK
116	5	12	2	"	LOW COOLANT MODULE

LEGEND

FRONT JUNCTION PANEL
REAR JUNCTION PANEL
BATTERY COMPARTMENT
CIRCUIT BREAKER
HARNESS CONNECTOR

BATTERY JUNCTION BLOCK
SINGLE CONNECTOR
DIODE (RECTIFIER)
OPTION

ITEM	DATE	REVISION	
C	88-05	CB85 ETAIT 5A	M
B	88-03	MISE AJOUR "FUNCTION"	B.C.
A	88-03	ETAIT /J008	BC

DESC: CIRCUIT BREAKER CODE

DESS: D.V. | DATE - 88-02 | VER. - | APPR. -

APPL: EFF. W/J009 A | REF: H5-60 | NO: D-060660 P-D2 | C

D-060660 "2" P.D2

CONNECTOR CODE

M

CONNECTOR

C#	LOCATION	DESIGNATION	NO. CAVITY
C1	FR. JCT. BOX COMPT.	FR. JCT. BOX TO INTERFACE HARNESS	24
C2	" " " "	" " " " " "	22
C3	" " " "	" " " " " "	37
C4	" " " "	" " " " " "	37
C5	" " " "	" " " " " "	37
C6	FR. SERVICE COMPT.- UNDERNEATH	FROM ARTICULATION TO INTERFACE HARNESS	37
C7	" " " "	" " " " "	24
C8	" " " "	FROM ENGINE JCT BOX TO INTERFACE HARNESS	37
C9	" " " "	" " " " " "	16
C10			
C11			
C12	ARTICULATION	FROM FR. SERVICE COMPT TO ARTICULATION HARN.	24
C13	"	" " " " "	37
C14	"	FROM ENG. JCT BOX TO ARTICULATION HARN.	6
C15	"	" " " " "	24
C16	FR. SECT. LH HAT RACK - RR	FEED LH HAT RACK ACCESSORIES	9
C17	FR. SECT. RH HAT RACK - RR	FEED RH HAT RACK ACCESSORIES	9
C18			
C19			
C20			
C21			
C22	" " "	" " " " "	37
C23			
C24			
C25	ENGINE JCT. BOX - ENGINE COMPT.	ENG. JCT. BOX TO ENGINE CRADLE HARNESS	35
C26	" " " " "	" " " " "	47
C27			
C28	ENGINE JCT. BOX - ENGINE COMPT.	ENG. JCT. BOX TO ENGINE CRADLE HARNESS	26
C29	" " " " "	ENG. JCT. BOX TO ENGINE COMPT. HARNESS	22
C30			
C31	ENGINE JCT. BOX	FROM FR. SERVICE COMPT. TO ENGINE JCT. BOX	16
C32	" " "	ENG. JCT. BOX TO LUGGAGE COMPT. LTS.	22
C33			
C34			
C35			
C36			
C37			
C38			

-CONNECTOR

C#	LOCATION	DESIGNATION	NO. CAVITY
C39	FR. SECT. LH HAT RACK - RR	FEED LH SPEAKER	2
C40	FR. SECT. RH HAT RACK - RR	FEED RH SPEAKER	2
C41	FR. SECT. RH HAT RACK - RR	FEED RH 110V FLUORESCENT	2
C42	FR. SECT. LH HAT RACK - RR	FEED LH 110V FLUORESCENT	2
C43			
C44	FR. JCT BOX COMPT.	ANTI-SKID E.C.U. MODULE	35
C45	ALARM JCT BOX COMPT.	FEED FR. ROOF ACCESSORIES	24
C46	FR. SERVICE COMPT.	FEED FR. SERVICE COMPT. ACCESSORIES	24
C47	FR. SERVICE COMPT.	FEED HEAD & FOG LAMP	7
C48	FR. AXLE	FEED FR. AXLE ACCESSORIES	22
C49	ALARM JCT BOX COMPT.	FEED INSTRUMENT PANEL	37
C50	" " " "	" " "	37
C51	" " " "	" " "	24
C52			
C53			
C54	UNDER DASH - LH CORNER	FEED P.A. UNIT	3
C55	UNDER DASH - CENTER	FEED RH SW. PANEL	9
C56	" " " "	FEED RH CONSOLE	24
C57	" " " "	FEED UNDER DASH ACCESSORIES - RH	22
C58	FR JCT BOX COMPT.	OPTION SLIP DRIVE CONTROL	3
C59	LH CONSOLE	CRUISE ON OFF SW.	8
C60	" "	CRUISE SET SW.	8
C61	" "	CRUISE RESUME SW.	8
C62			
C63			
C64			
C65			
C66			
C67			
C68	ALARM JCT BOX	ALARM JCT. BOX TO INTERFACE HARNESS	16
C69	" " "	FEED DASH INSTRUMENT PANEL	16
C70	" " "	FEED LH CONSOLE	24
C71	UNDER INSTRUMENT PANEL - LH	FEED INSTRUMENT PANEL - LH	37
C72	UNDER INSTRUMENT PANEL	FEED CENTRAL INSTRUMENT PANEL	37
C73	" " "	" " " "	16
C74			
C75	ALARM JCT BOX COMPT.	FEED FR. ROOF ACCESSORIES	22
C76	FR. SERVICE COMPT.	FROM ENGINE JCT. BOX TO INTERFACE HARNESS	14

LEGEND

FRONT JUNCTION PANEL
REAR JUNCTION PANEL
BATTERY COMPARTMENT
CIRCUIT BREAKER
HARNESS CONNECTOR

BATTERY JUNCTION BLOCK
SINGLE CONNECTOR
DIODE (RECTIFIER)
OPTION

[redacted]

ITEM	DATE	REVISION	PAR
A	88-03	ETAIT /J008	B.C.

DESC: CONNECTOR CODE

DESS: D.T. | DATE- 88-02 | VER.- | APPR.-

APPL: EFF. W/J009 ⚠ | REF: H5-60 | NO: D-060660 p. E1 | C

M

CONNECTOR CODE

CONNECTOR			
C#	LOCATION	DESIGNATION	NO. CAVITY
C77	FR. SERVICE COMPT.	FEED FR. SERVICE COMPT. ACCESSORIES	16
C78			
C79	DRIVE AXLE	FEED DRIVE AXLE ACCESSORIES	22
C80	ENGINE JCT BOX COMPT.	FROM ARTICULATION TO ENGINE JCT. BOX	14
C81	" " " "	ELECTRONIC CONTROL MODULE ENGINE	30
C82	" " " "	" " " "	30
C83	" " " "	ELECTRONIC CONTROL UNIT (TRANSMISSION)	30
C84	" " " "	" " " "	30
C85	FR. JCT BOX COMPT.	SPEED LIMITE SW.	9
C86	FR. SERVICE COMPT.	SIDE FLASHER RH	2
C87	" " "	SIDE MARKER	2
C88	" " "	DRIVER'S LIQUID SOL. VALVE	2
C89	" " "	DRIVER'S WATER VALVE	2
C90	" " "	THROTTLE POSITION SENSOR	3
C91	" " "	INSTRUMENT PANEL RHEOSTAT	2
C92	" " "	AIR RETURN SENSOR	2
C93	" " "	SIDE FLASHER LH	2
C94	" " "	BRAKE INTERLOCK SOL. VALVE	2
C95	" " "	FRESH AIR DAMPER SOL. VALVE	2
C96	" " "	ELECTRICAL HORN	2
C97	" " "	BELLOWS CTR. VALVE	2
C98	" " "	EXHAUST CTR. SOL. VALVE	2
C99	" " "	STEERING COMPT. LTS	2
C100	CENTRAL JCT. BOX	CENTRAL JCT BOX TO RR SERVICE COMPT.	22
C101	RR SERVICE COMPT.	FEED RR LOWER LAMP	16
C102	" " "	FEED RR ROOF ACCESSORIES	22
C103	" " "	FEED RR SERVICE COMPT. ACCESSORIES	24
C104	RR AXLE ACCESSORIES	FEED RR AXLE ACCESSORIES	22
C105	ARTICULATION	FROM ARTICULATION TO RR SERVICE COMPT.	14
C106	RR END LH SIDE	RR LH LOWER LAMP	9
C107	RR END CENTER	CYCLOP LT.	2
C108	" " "	LICENCE PLATE LT.	2
C109	RR END RH SIDE	RR RH LOWER LAMP	9
C110	RR SERVICE COMPT.	RR JCT BOX	24
C111	RR SECT. LH HAT RACK - FR.	FEED LH HAT RACK ACCESSORIES	9
C112	RR SECT. RH HAT RACK - FR.	FEED RH HAT RACK ACCESSORIES	9
C113	RR SECT. LH HAT RACK - FR.	FEED LH SPEAKER	4
C114	RR & FR LH HAT RACK	FOR READING LTS	2

CONNECTOR			
C#	LOCATION	DESIGNATION	NO CAVITY
C115	HAT RACK	FLUORESCENT	4
C116	" "	BALLAST DISTRIBUTION	6
C117	" "	BALLAST FEEDING	4
C118	" "	FEED GENERAL & HAT RACK LTS	3
C119	" "	FLUORESCENT	4
C120	" "	BALLAST DISTRIBUTION	6
C121	RR SECT. RH HAT RACK - FR.	FEED 110-V FLUOR.	2
C122	" " " " " "	FEED SPEAKER	4
C123	RR & FR. RH HAT RACK	READING LTS	2
C124	CENTRAL JCT. BOX	FROM CENTRAL JCT. BOX TO RR RH HAT RACK	24
C125			
C126	CENTRAL JCT. BOX	FROM CENTRAL JCT. BOX TO RR LH HAT RACK	24
C127	ARTICULATION	RR DIGITAL THERMOMETER FEEDING	3
C128			
C129	CENTRAL JCT. BOX	FROM CENTRAL JCT. BOX TO LUGGAGE COMPT.	24
C130			
C131	CENTRAL JCT. BOX	FROM CENTRAL JCT. BOX TO ARTICUL. HARN.	6
C132	" " "	" " " " "	24
C133	" " "	" " " " "	37
C134	" " "	" " " " "	16
C135			
C136	CENTRAL JCT. BOX	FROM CENTRAL JCT. BOX TO RR SERVICE COMPT.	16
C137	RH CONSOLE	RR DIGITAL THERMOMETER	2
C138	AISLE RR STEP WELL	AIR RETURN SENSOR	2
C139	LH & RH ROOF ARTICULATION	FEED EMERGENCY EXIT LTS	2
C140	RR SECT. LH HAT RACK - FR.	FEED 110-V FLUOR.	2
C141	FR. SERVICE COMPT.	KNEELING LT	2
C142	RH CONSOLE	FR. DIGITAL THERMOMETER	2
C143	FR. LUGGAGE COMPT.	" " " SENSOR	2
C144	ARTICULATION - LH	RR DIGITAL THERMOMETER SENSOR	2
C145	RR SECT. LUGGAGE COMPT. - RH	LUGGAGE LTS	2
C146	" " " " "	" "	2
C147	" " " " "	FEED LUGGAGE DOOR LOCK	6
C148	" " " " "	LUGGAGE LTS	2
C149	" " " " "	FEED LUGGAGE DOOR LOCK	6
C150	" " " " "	LUGGAGE LTS	2
C151	" " " " "	AIR RETURN SENSOR	2
C152	" " " " "	FEED LUGGAGE DOOR LOCK	6

PREVOST

LEGEND

- FRONT JUNCTION PANEL
- REAR JUNCTION PANEL
- BATTERY COMPARTMENT
- CIRCUIT BREAKER
- HARNESS CONNECTOR
- BATTERY JUNCTION BLOCK
- SINGLE CONNECTOR
- DIODE (RECTIFIER)
- OPTION

CE DOCUMENT EST LA PROPRIÉTÉ EXCLUSIVE DE PREVOST CAR INC. TOUTES CLAUSES QUI, IL EST INTERDIT DE LE REPRODUIRE OU DE DIVULGUER SON CONTENU EN TOUT OU EN PARTIE, DÉVOILER À D'AUTRES PERSONNES OU À QUI CE SOIT, SANS LE CONSENTEMENT ÉCRIT DE PREVOST CAR INC.

THIS DOCUMENT IS THE EXCLUSIVE PROPERTY OF PREVOST CAR INC. ITS CLAUSES, THAT IT MAY NOT BE USED OR REPRODUCED, NOR THE CONTENT OR PART THERE OF DISCLOSED TO OTHERS BY ANY PERSON OR COMPANY SAVE WITH THE EXPRESS CONSENT IN WRITING FROM PREVOST CAR INC.

ITEM	DATE	REVISION	PAR
A	88-03	ETAIT /J008	B.C

DESC: CONNECTOR CODE

DESS: D.V. | DATE- 88/02 | VER.- | APPR.-

APPL: EFF. W/J009 ⚠1 | REF: H5-60 | NO: D-060660 p. E2 | C

CONNECTOR CODE

CONNECTOR			
C#	LOCATION	DESIGNATION	NO. CAVITY
C153	RR SECT. LUGGAGE COMPT. LH	LUGGAGE LTS	2
C154	" " " " "	AIR AMBIENT SENSOR	2
C155	" " " " "	LUGGAGE LTS	2
C156	" " " " "	FEED LUGGAGE DOOR LOCK	6
C157	" " " " "	LUGGAGE LTS	2
C158	" " " " "	FEED LUGGAGE DOOR LOCK	6
C159	" " " " "	LUGGAGE LTS	2
C160	" " " " "	AIR RETURN SENSOR	2
C161	" " " " "	LUGGAGE DOOR LOCK	6
C162	RR SECT. LUGGAGE COMPT.	ST1 WATER VALVE	2
C163	" " " "	ST2 WATER VALVE	2
C164	" " " "	ST3 WATER VALVE	2
C165	" " " "	LIQUID SOLENOID VALVE	2
C166	" " " "	FEED WATER VALVE	9
C167	RR END ROOF	CLEARANCE LTS	2
C168	" " "	WATCH YOUR STEP	2
C169	" " "	LAVATORY OCCUPIED SW.	2
C170	RR SECT. UNDER LH SEAT	FEED. LH UNDER SEAT ACCESSORIES	4
C171	" " " " "	ACCELEROMETER	2
C172	" " " " "	AISLE LTS	2
C173	" " " " "	RUNNING LTS	2
C174	UNDER DASH - RH	DRIVERS HTR SPEED CTR MODULE	9
C175	" " "	" " " " "	9
C176	" " "	LOWER WIND. WIPER PULSE GENERATOR	6
C177	" " "	LOWER WINDSHIELD WIPER MOTOR	6
C178	" " "	DRIVER'S HTR & DEFROSTER LH FAN	2
C179	" " "	" " " RH "	2
C180	RR END ROOF - CENTER	CAMERA	4
C181	" " " - LH	LAVATORY FLUORESCENT	2
C182	" " " - LH	WATER TANK HEATER	3
C183	RR SERVICE COMPT.	SIDE MARKER	2
C184	" " "	SIDE DIRECTIONNAL LTS LH	2
C185	" " "	FRESH AIR DAMPER SOL. VALVE	2
C186	" " "	FRESH AIR SENSOR	2
C187	" " "	CAMERA DOOR SOLENOID	2
C188	" " "	CAMERA DOOR CTR. SW.	4
C189	" " "	LAVATORY PUMP	2
C190	" " "	BACK-UP ALARM	2

CONNECTOR			
C#	LOCATION	DESIGNATION	NO. CAVITY
C191	RR SERVICE COMPT	TOILET VENTILATION	2
C192	" " "	SIDE DIRECTIONNAL LTS - RH	2
C193			
C194	ARTICULATION	ARTICULATION PHONE	4
C195	ARTICULATION	ANTI - JACK SYSTEM	2
C196	ENGINE JCT BOX	RED LED INDICATOR - FR. SECT. (HTR)	2
C197	" " "	" " " - RR. SECT. (HTR)	2
C198	" " "	GREEN LED INDICATOR - FR. SECT. (A/C)	2
C199	" " "	" " " - RR. SECT. (A/C)	2
C200	FR. SECT. HAT RACK	FLUORESCENT	4
C201	" " " "	"	4
C202	" " " "	BALLAST FEEDING	4
C203	" " " "	BALLAST DISTRIBUTION	6
C204	" " " "	FEED GENERAL & HAT RACK LTS	3
C205	FR. SECT. RH HAT RACK - FR.	SPEAKER	4
C206			
C207			
C208	FR. SECT. - LH HAT RACK	BALLAST FEEDING	4
C209	" " " " "	READING LTS	2
C210	FR. SECT. LH HAT RACK - FR.	SPEAKER	4
C211	FRONT ROOF	DRIVER'S STORE - LH	2
C212	" "	DRIVER'S STORE - RH	2
C213	" "	CLEARANCE LTS	2
C214	" "	AMPLIFIER RH SPEAKER CONNECTION	2
C215	" "	" LH " "	2
C216	UNDER DASH - LH CORNER	P.A. DISTRIBUTION	9
C217	" " " "	P.A. MICRO OUTLET	3
C218	" " " "	P.A. VOLUME	3
C219	" " " "	P.A. DRIVER'S SPEAKERS CONNECTION	4
C220	" " " "	P.A. AMPLIFIER CONNECTION	7
C221	" " " "	P.A. RADIO CONNECTION	7
C222	ALARM JCT BOX COMPT.	MICRO OUTLET	4
C223	" " " "	DRIVER'S SPEAKERS FEEDING	4
C224	RH SWITCH PANEL	RADIO	7
C225			
C226	FR. ROOF - LH	AMPLIFIER	7
C227	RH SWITCH PANEL	SPEAKER SELECTOR SW.	8
C228	" " "	MICRO OUTLET	4

PREVOST

LEGEND

REV	DATE	REVISION	
C	91-02	MISE À JOUR	M.L.
B	89-02	O.C. #89033, C.D. #16/82	R.B.
A	88-03	ETAIT 11008	B.C.

DESC: CONNECTOR CODE

DESS: D.V. DATE: 88/02

VER.: C APPR.:

APPL: EFR W/N009 ⚠ PRIOR L033 REF: H5-60 N°: D-060660 R E3 C

CONNECTOR CODE

CONNECTOR			
C#	LOCATION	DESIGNATION	NO. CAVITY
C229	RH SWITCH PANEL	P.A. VOLUME CONTROL	4
C230	" " "	LH DRIVER'S SPEAKER	2
C231	" " "	RADIO FEEDING	4
C232	" " "	RH DRIVER'S SPEAKER	2
C233	FR. SECTION ARTICULATION	ARTICULATION VERTICAL SAFETY SW.	2
C234	" " "	ARTICULATION HORIZONTAL SAFETY SW.	6
C235	" " "	LOW COOLANT SENSOR	3
C236			
C237	FR. SECT. UNDER SEAT - LH	AISLE LTS FEEDING	2
C238	" " " " "	AISLE LTS	2
C239	FR. AXLE	FUEL TANK LEVEL GAUGE	4
C240	" "	KNEELING SW.	2
C241	FR. SERVICE COMPT.	FOG RESISTOR BOX	3
C242	" " "	FR. L.H. MARKER & DIRECT. LT.	3
C243	" " "	HEADLAMPS	3
C244	" " "	L.H. FOG LAMP	2
C245	" " "	R.H. FOG LAMP	2
C246	" " "	FR. R.H. MARKER & DIRECT. LT.	3
C247			
C248	ALARM JCT. BOX	UPPER WIND. WIPER PULSE GENERATOR	12
C249	" " "	CONVERTER 12V TO 5V (B/U MONITOR)	3
C250	" " "	DASH LTS REGULATOR CTR	6
C251	LT SWITCH PANEL	FAST IDLE SW.	8
C252	" " "	SWITCH LTS.	2
C253	" " "	ETHER SW.	8
C254	" " "	WEBASTO SW.	8
C255	" " "	RETARDER SW.	8
C256			
C257			
C258	LT SWITCH PANEL	MULTI - FUNCTION SW.	8
C259	" " "	MULTI - FUNCTION SW.	6
C260	INSTR. PANEL - CENTER PLATE	TACHOGRAPH HEAD RPM	4
C261	" " " "	TACHOGRAPH HEAD ANTI-JACK	4
C262	" " " "	TACHOGRAPH HEAD FEEDING	4
C263	" " " "	TACHOGRAPH HEAD SPEEDO	4
C264	" " " "	ENGLER TACHO HEAD	6
C265	" " " "	ENGLER SPEEDO HEAD	6
C266	ENGINE CRADLE	MANUAL TRANSMISSION ACCES.	4

CONNECTOR			
C#	LOCATION	DESIGNATION	NO. CAVITY
C267	ENGINE CRADLE	SPEED SENSOR	3
C268	" "	RPM SENSOR	3
C269	ENGINE CRADLE	JACOB L.H. BANK BRAKE	1
C270			
C271	ENGINE CRADLE	JACOB R.H. BANK BRAKE	1
C272			
C273	ENGINE CRADLE	MOTOR BLOCK HEATER	3
C274			
C275	" "	DDEC OPTION	4
C276	" "	CONDENSER FAN SOL. VALVE	2
C277	ENGINE CRADLE	RACOR FUEL FILTER	2
C278	" "	WEBASTO	6
C279	" "	FR. WATER PUMP	2
C280	" "	FR. ST3 WATER VALVE	2
C281	" "	FR. ST2 WATER VALVE	2
C282	" "	FR. ST1 WATER VALVE	2
C283	" "	ATEC SPEED SENSOR	2
C284	" "	ATEC THROTTLE SENSOR N/A	3
C285	" "	ATEC TRANSMISSION	23
C286	RH SWITCH PANEL	A/C & HEAT SW.	1
C287	" " "	A/C FAN ONLY	1
C288	" " "	FRESH AIR SW.	1
C289	" " "	SWITCH LTS	2
C290	FR. A/C UNIT	A/C VARIATOR SPEED CONTROL	3
C291	FR. SECTION LUGGAGE COMPT.	LUGGAGE LTS	2
C292	" " "	" "	2
C293	" " "	" "	2
C294	" " "	" "	2
C295	" " "	AIR AMBIENT SENSOR	2
C296	" " "	LUGGAGE LTS	2
C297	FR SECTION LUGGAGE COMPT.	AIR RETURN SENSOR	2
C298	" " " "	" " "	2
C299	" " " "	LUGGAGE LTS	2
C300	" " " "	FRESH AIR SENSOR	2
C301			2
C302	FR. SECTION LUGGAGE COMPT.	LIQUID SOLENOID VALVE	2
C303	" " " "	LUGGAGE DOOR LOCK FEEDING	6
C304	" " " "	" " " "	6

PREVOST

LEGEND

- FRONT JUNCTION PANEL
- REAR JUNCTION PANEL
- BATTERY COMPARTMENT
- CIRCUIT BREAKER
- HARNESS CONNECTOR
- BATTERY JUNCTION BLOCK
- SINGLE CONNECTOR
- DIODE (RECTIFIER)
- OPTION

ITEM	DATE	REVISION	PAR
A	91-02	MISE A JOUR	M.L.
A	88-03	ETAIT /J008	R.C.

DESC: CONNECTOR CODE

DESS: D.T. DATE: 88/02

VER.: APPR.:

APPL: EFF. W/J009 PRIOR L033 REF: H5-60 NO: D-060660 R E4

CONNECTOR CODE

CONNECTOR C#	LOCATION	DESIGNATION	NO. CAVITY
C 305	FR SECTION LUGGAGE COMPT.	LUGGAGE DOOR LOCK FEEDING	6
C 306	" " " "	" " " "	6
C 307	L.H. CONSOLE	DRIVER'S SEAT HEATER	4
C 308	" "	DASH LT. RHEOSTAT	
C 309	" "	GALLEY SW.	8
C 310	" "	LUGGAGE DOOR LOCK SW.	8
C 311	" "	HOSTESS & PASS. CHIME SW.	8
C 312	" "	READING LT. SW.	8
C 313	" "	GENERAL LT. & 24V FLUOR. SW.	8
C 314	" "	FR. DESTINATION SIGN SW.	8
C 315	" "	L.H. STORE SW.	8
C 316	ENGINE COMPT.	ETHER QUICKSTART VALVE	2
C 317	L.H CONSOLE	R.H. STORE SW.	8
C 318	" "	DRIVER'S WINDOW LIFTER	
C 319	" "	DRIVER'S SEAT HEATER SW.	8
C 320	" "	DRIVER'S LT. SW.	8
C 321	" "	SHIFTER SELECTOR	16
C 322	" "	DRIVER'S WINDOW LIFTER MOTOR	2
C 323	" "	CRUISE CONTROL SW. PANEL	14
C 324	" "	ARTICULATION BRAKE SW.	8
C 325	" "	KNEELING SW.	8
C 326	" "	RR. & FR. ENTRANCE DOOR SW.	8
C 327	ENGINE COMPT.	ENGINE CONTROL SWITCHES	9
C 328	" "	WATER PUMP	2
C 329	" "	SERVICE LTS.	1
C 330	ENGINE COMPT. - AT A/C COMPR.	UNDER LOADER SOL. VALVE	2
C 331	" " " "	" " " "	2
C 332	" " " "	A/C COMPR. CLUTCH	2
C 333	" " " "	A/C LO-PRESSURE SW.	2
C 334	" " " "	A/C HI-PRESSURE SW.	2
C 335	ENGINE COMPT.	RETARDER SOL. VALVE	2
C 336	INSTRUMENT PANEL - LH SECT.	INSTRUMENT & SW. LTS	
C 337	" " "	UPPER WIND. WIPER MOTOR CONTROL SW.	8
C 338	" " "	UPPER WINDSHIELD DEFROST SW.	8
C 339	" " "	UPPER WINDSHIELD WASHER CTR. SW.	8
C 340	" " "	L.H. MIRROR ADJUSTING SW.	8
C 341	" " "	HEATED MIRROR SW.	8
C 342	" " "	R.H. MIRROR ADJUSTING SW.	8

CONNECTOR C#	LOCATION	DESIGNATION	NO. CAVITY
C 343	INSTRUMENT PANEL - LH. SECT.	HEADLAMP SW.	8
C 344	" " " "	HAZARD WARNING LTS SW.	8
C 345	" " "	FOG LT. SW.	8
C 346	" " " "	SWITCH LTS.	2
C 347	" " " "	DASH LT. SW.	2
C 348	INSTRUMENT PANEL - CENTER	RACOR FILTER T.T. LT. MODULE	6
C 349	R.H. CONSOLE	RED LED INDICATOR - FR. SECT. (HTR)	2
C 350	" "	DIGITAL THERMOMETER	3
C 351	" "	RED LED INDICATOR - RR. SECT. (HTR)	2
C 352	" "	DRIVER'S TEMP. CONTROL SENSOR	3
C 353	INSTRUMENT PANEL - RH	DRIVER'S HTR. FAN SPEED CTR. RHEOSTAT	6
C 354	" " "	DRIVER'S TEMP. CONTROL	6
C 355	" " "	FRONT TEMP. CONTROL	3
C 356	" " "	REAR TEMP. CONTROL	3
C 357	" " "	WATER TEMP. GAUGE	3
C 358	" " "	FUEL LEVEL GAUGE	3
C 359	" " "	INSTRUMENT PANEL LIGHTING	2
C 360	" " "	B/U MONITOR	2
C 361	FR. ROOF	UPPER WIPER MOTOR	6
C 362	" "	LAVATORY OCCUPIED SIGN	2
C 363	" "	WATCH YOUR STEP SIGN	2
C 364	" "	FR. DESTINATION SIGN	3
C 365	" "	UPPER WINDSHIELD DEFROST	3
C 366	R.H. CONSOLE	GREEN LED INDICATOR - FR. SECT. (A/C)	2
C 367	" "	GREEN LED INDICATOR - RR. SECT. (A/C)	2
C 368	ENG. JCT. BOX	HI & LO PRESS N/C	6
C 369	ALARM JCT. BOX COPT.	FEED L.H. SW. PANEL	6
C 370	FR. SERVICE COMPT. - UNDERNEATH	FROM ARTICULATION TO INTERFACE HARNESS	37
C 371	FR. SERVICE COMPT.	FROM ENGINE JCT. BOX TO INTERFACE HARNESS	16
C 372	ENGINE JCT. BOX	FROM FR. SERVICE COMPT. TO ENGINE JCT BOX	37
C 373	" " "	" " " " "	16
C 374	ALARM JCT. BOX	ALARM JCT. BOX TO INTERFACE HARNESS	37
C 375	ALARM JCT. BOX COMPT.	FEED LH CONSOLE	37
C 376	" " " "	FEED LH SW. PANEL	37
C 377	LT. SWITCH PANEL	STOP ENGINE OVERRIDE SW.	8
C 378	FR. SERVICE COMPT.	FEED FR. SERVICE COMPT. ACCES.	16
C 379	ARTICULATION	FR. COMPT. TO ENGINE COMPT.	24
C 380	"	FEED ARTICULATION ACCES.	22

PREVOST

LEGEND

FRONT JUNCTION PANEL
REAR JUNCTION PANEL
BATTERY COMPARTMENT
CIRC. BREAKER
HARNESS CONNECTOR

BATTERY JUNCTION BLOCK
SINGLE CONNECTOR
DIODE (RECTIFIER)
JUMPER

THIS DOCUMENT AND THE INFORMATION CONTAINED THEREIN IS THE PROPERTY OF PREVOST CAR INC. ... PREVOST CAR INC.

ITEM	DATE	REVISION	PAR
B	91-02	MISE A JOUR	M2
A	88-03	ETAIT /J008	B.C.

DESC: CONNECTOR CODE

DESS: D.T. | DATE: 88-02

VER.: 2C | APPR.:

APPL: EFF. W/J009 ⚠ PRIOR L033 | REF: H5-60 | NO: D-060660 | p.E5 | C

CONNECTOR CODE

CONNECTOR			
C #	LOCATION	DESIGNATION	NO. CAVITY
C 381	ENGINE JCT BOX	FROM ARTICULATION TO ENGINE JCT. BOX	24
C 382	ALARM JCT BOX	DIAGNOSTIC DDEC II & ATEC	12
C 383	ENGINE JCT BOX	ATEC & DDEC II - INTERFACE MODULE	3
C 384	" " "	" " " "	1
C 385	" " "	HARNESS No 1 TO No 2	37
C 386	" " "	LOW COOLANT MODULE	6
C 387	" " "	ATEC & DDEC II - INTERFACE MODULE	6
C 388	" " "	" " " "	2
C 389	INSTR. PANEL - CENTER PLATE	TACHO. & SPEEDO. DASH LTS	2
C 390	ENGINE CRADLE	RPM SENSOR	2

CONNECTOR			
C #	LOCATION	DESIGNATION	NO. CAVITY

PREVOST

LEGEND

- FRONT JUNCTION PANEL
- REAR JUNCTION PANEL
- BATTERY COMPARTMENT
- CIRCUIT BREAKER
- HARNESS CONNECTOR
- BATTERY JUNCTION BLOCK
- SINGLE CONNECTOR
- DIODE (RECTIFIER)
- OPTION

THIS DOCUMENT IS THE EXCLUSIVE PROPERTY OF PREVOST CAR INC. ITS CONTENT MAY NOT BE COPIED, DISCLOSED TO OTHERS OR USED IN ANY WAY WITHOUT THE EXPRESS CONSENT OF PREVOST CAR INC.

ITEM	DATE	REVISION	PAR
C	88-10	C389 & C390 AJOUTES	MJ
B	88-05	C387 & C388 AJOUTÉS	MJ
A	88-03	ETAIT 1J008	B.C.

DESC : CONNECTOR CODE

DESS: D.V. | DATE: 88-02

VER.- | APPR.-

APPL: EFF. W/J009 △5 | REF: H5-60 | NO: D-060660 p. E6 | C

DIODE CODE

DIODE					
D#	AMP.	VOLT.	DIAG. PAGE	LOCALISATION	FONCTION
1		24	4	FR. JCT. BOX	LO. AIR SEC.
2		24	4	"	LO. AIR PRIM.
3		"	5	"	HEAD LAMP CTR
4		24	1	ENG. JCT. BOX	NEUTRAL GROUND
5		"	9	ENG. JCT. BOX	RR ELECTRONIC TRANSMITTER
6		"	12	"	A/C CTR MODUL - REAR
7		"	10	"	FR ELECTRONIC TRANSMITTER
8		"	12	"	A/C CTR MODUL - REAR
9		"	12	"	" " " "
10		"	11	"	A/C CTR
11		"	11	FR. JCT. BOX	" "
12		"	11	"	" "
13		"	16	CENT. JCT. BOX	TOILET
14		"	18	FR. JCT. BOX	REAR & FRONT CTR DOOR
15		"	18	"	" " " "
16		"	18	"	" " " "
17		"	21	"	KNEELING CTR
18		"	21	"	" "
19		"	21	"	" "
20		12	21	ENG. JCT. BOX	ARTICULATION SW # 3
21		24	13	"	FAN A/C ONLY
22		24	5	FR. JCT. BOX	HAZARD - FLASHER RH.
23		24	5	"	" " LH.
24		24	5	"	(BRAKE TT LT) SW.
25		24	5	"	(FASTIDLE SW) STOP SW.
26		24	13	ENG. JCT. BOX	FAN A/C ONLY
29		24	22	CENT. JCT. BOX	ARTICULATION BRAKE SYSTEM
31		24	22	CENT. JCT. BOX	ARTICULATION BRAKE SYSTEM
32	20	24	23	ENG. JCT. BOX	LUGGAGE DOOR LOCK FR.
33	20	24	23	"	" " " "
34	20	24	23	CENT. JCT. BOX	LUGGAGE DOOR LOCK RR
35	20	24	23	"	" " "
36	20	24	23	"	" " "
37	20	24	23	"	" " "
38	3	24	5	FR. JCT. BOX	BACK-UP CORNERING "SPECIAL VOYAGEUR"

DIODE					
D#	AMP.	VOLT.	DIAG. PAGE	LOCALISATION	FONCTION
39	3	12	5	FR. JCT. BOX	BACK-UP CORNERING "SPECIAL VOYAGEUR"
40	3	12	5	"	" " " "
41	3	24	5	"	" " " "
42					
43					
44					
45					
46					
47					
48					
49					
50					
51					
52	3	24	11A	R.H SW PANEL	FRESH AIR CONTROL

ITEM	DATE	REVISION	PAR
F	91-02	MISE A JOUR	ML
E	89-09	D38 à D41 AJOUTES OC# 89142	ML
D	89-02	O.C.# 89033, C.D.# 16183	RL
C	89-01	D32 à D37 AJOUTE OC# 89012	ML
B	88-03	D-4 AJOUTÉ	ML
A	88-03	ÉTAIT /J008	B.C

BOMBARDIER — LEGEND

FRONT JUNCTION PANEL
REAR JUNCTION PANEL
BATTERY COMPARTMENT
CIRCUIT BREAKER
HARNESS CONNECTOR
BATTERY JUNCTION BLOCK
SINGLE CONNECTOR
DIODE (RECTIFIER)
OPTION

DESC: DIODE CODE

DESS: D.T. DATE: 88-02
VER.: C APPR.: RL

APPL: EFF. W/J009 ⚠ PRIOR L033 REF: H5-60

NO: D-060660 F C

RELAYS CODE

R#	DIAG. PAGE	VOLT COIL	AMP	CATEGORY	LOCALISATION	FUNCTION
74	5	24	20	CUBIC NO.	FR. JCT. BOX	BACK-UP CORNERING "SPECIAL" VOYAGEUR
75	5	24	20	"	"	" " "
76	18A	12	30	CUBIC NO.	RR SERVICE R.H. COMPT.	RR STEP LTS "
77	18A	12	30	"	UNDER DASH R.H	FR STEP LTS "

RELAYS CODE

R#	LINE PAGE	VOLT COIL	AMP	CATEGORY	LOCALISATION	FUNCTION

P.G2

RELAYS CODE

RELAYS

R#	DIAG. PAGE COIL	DIAG. PAGE CONT'T	AMP	CATEGORY	VOLT. COIL	LOCATION	FUNCTION
1	1	4	200	MAGNETIC N.O.	24	FR. JCT. BOX	ENGINE RUN (24 V)
2	1	1	20	CUBIC N.O.	"	ENG. JCT. BOX	" " (24 V)
3	1	16	10	" N.C.	"	CENT. JCT. BOX	" " (24 V)
4	1	1	200	MAGNETIC N.O.	"	ENG. JCT. BOX	STARTING MOTOR
5	1	11	20	CUBIC N.C.	12	FR. JCT. BOX	BLOWER CUT IN
6	2	2	20	" N.O.	24	ENG. JCT. BOX	BRAKE SW CRUISE CTR.
7	2	2	10	" N.C.	"	"	FAST IDLE DDEC CTR
8	3	3	10	" "	"	"	CUT IN 12V ATEC
9	3	3	20	" N.O.	"	"	CHECK TRANSM ATEC
10	3	3	20	" "	"	"	BACK UP ATEC SIGNAL
E 11	3	3	30	" "	"	"	RETARDER ATEC
12	4	4	20	" "	24	FR. JCT. BOX	ELECTRICAL HORN
13	4	4	20	" "	"	"	FRONT FOG LT
14	5	4	20	" "	"	"	HEADLAMPS CONTROL
15	5	4	20	" "	"	"	HEADLAMPS (HI)
16	5	4	20	" "	"	"	" (Lo)
17	5	7	20	" "	"	"	FRONT CLEARANCE LT
18	5	10	20	" "	"	"	U/SEAT LT & DASH RHEOSTAT
19	5	6	20	" "	"	"	RH. DIRECTIONAL LT
20	5	6	20	" "	24	"	LH. " "
21	5	5	10	" N.C.	"	"	BLINKER
22	5	5	20	" N.O	"	CENT. JCT. BOX	RR CLEAR MARKER & LIC. LT
23	7	5	20	" "	"	"	STOP LT
24	9	9	20	" "	"	ENG. JCT. BOX	FRONT FLUORESCENT (24V)
25	9	9	20	" "	"	"	FRONT READING LTS
26	9	9	20	" "	"	CENT. JCT. BOX	REAR " "
27	9	9	20	" "	"	ENG. JCT. BOX	GENERAL LTS
28	9	9	20	" "	24	"	A/C LOGIC PANEL
29	11	13	20	" "	"	"	REAR WATER PUMP
30	13	11	20	" "	"	"	REAR ELECTRONIC TRANSMIT.
31	12	13	10	" N.C.	"	"	FRONT WATER PUMP
32	13	12	20	" N.O.	"	"	FRONT ELECTRONIC TRANSMIT.
33					"		
34	12	13	20	CUBIC N.O.	"	ENG. JCT. BOX	A/C COMPRESSOR CLUTCH
35	12	13	20	" "	"	"	COND. FAN SOL. VALVE
1A	1	22	20	" "	24	FR. JCT. BOX	12V IGNITION - FR.
2A	1	1	20	" "	"	ENG. JCT. BOX	12V IGNITION - ENG.
3A	1	22	20	" "	"	CENT. JCT. BX	12V IGNITION - CENT

RELAYS

R#	DIAG. PAGE COIL	DIAG. PAGE CONT'T	AMP	CATEGORY	VOLT. COIL	LOCATION	FUNCTION
36	13	13	200	MAGNETIC N.O.	24	ENG. JCT. BOX	EVAP. FAN MOTOR - FR
37	13	13	200	" "	"	"	" " " - RR
38	13	13	20	CUBIC N.O.	"	FR. JCT. BOX	DEFROSTER CTR
39	8	8	20	" "	"	"	DOOR AJAR
40	18	18	20	" "	"	"	RR & FR DOOR SPEED SW CTR.
41	19	19	20	" "	"	"	ANTI SKID CTR
42	19	19	20	" "	"	"	" " "
43	19	19	20	" "	"	"	" " "
44	19	7	20 / 10	" N.O / N.C.	"	"	" " "
45	21	21	20	" N.O.	"	"	KNEELING CTR
46	21	21	10	" N.C.	"	"	" "
47	21	21	30	" N.O.	12	ENG. JCT. BOX	ARTICULATION SW
48	6	6	20	" "	24	FR. JCT. BOX	DOOR AJAR IGNITION
49	23	23	30	" "	12	"	RADIO & AMPLI.
50	23	23	30	" "	12	"	" "
E 51	2	2	30	" "	24	ENG. JCT. BOX	"KILL SW" CRUISE CTR.
52							
53	7	7	30	CUBIC N.O	12	CENT. JCT. BOX	BACK-UP LT
54	9	9	20	" "	24	"	GENERAL LT (REAR SECTION)
55	9	9	20	" "	24	"	24 V FLUOR (REAR SECTION)
56	5	5	20	" "	24	CENT. JCT. BOX	SIDE MARKER, TAIL & LICENCE LT.
57	1	1	20	" "	"	ENG. JCT. BOX	VOLTAGE REGULATOR - IGN.
58	16	16	20	" "	"	CENT. JCT. BOX	TOILET FLUORESCENT
59	5	6	20	" "	"	FR. JCT. BOX	CORNERING LT RH
60	5	6	20	" "	"	"	" " LH.
61	5	5	20	" "	"	"	" " CUT-OUT
62	5	7	20	" "	"	"	MARKER LT - FR SECTION
63	5	8	20	" "	"	CENT. JCT. BOX	EXIT LT
64	22	22	30	" "	12	RR STEP LPT	CAMERA DOOR SYST. - SERVICE
65	23	23	50	SPC. CUBIC N.O	"	ENG. JCT. BOX	LUGGAGE DOOR LOCK - FR
66	23	23	50	" " "	"	"	" " " - "
67	23	23	20	CUBIC N.O	24	CENT. JCT. BOX	LH LUGGAGE DOOR LOCK - RR
68	23	23	20	" "	"	"	" " " " - "
69	23	23	20	" "	"	"	RH LUGGAGE DOOR LOCK - RR
70	23	23	20	" "	"	"	" " " " - "
71	22	22	30	" "	12	FR. JCT. BOX	BACK-UP MONITOR
72	1	24	10	CUBIC N.C	24	"	RADIO AMPLIFIER CUT-IN
73	1	24	10	" "	24	"	" " " "

LEGEND

- FRONT JUNCTION PANEL
- REAR JUNCTION PANEL
- BATTERY COMPARTMENT
- CIRCUIT BREAKER
- HARNESS CONNECTOR
- BATTERY JUNCTION BLOCK
- SINGLE CONNECTOR
- DIODE (RECTIFIER)
- OPTION

ITEM	DATE	REVISION	PAR
E	88-09	VOIR C.D. 15090	B.C
D	88-05	MISE À JOUR	M/
C	88-05	MISE À JOUR	B.C
B	88-03	MISE À JOUR "FUNCTION"	B.C.
A	88-03	ÉTAIT /J008	B.C.

TITRE: RELAYS CODE

DESS: D.T. | DATE: 88-02 | VER.: - | APPR.: -

APPL: EFF. W/J009 A | REF: H5-60 | NO: D-060660 p. G | C

RESISTOR CODE

RESISTOR							
RS #	VOLTAGE BEFORE	VOLTAGE AFTER	WATT	CATEGORY	DIAG. PAGE	LOCATION	FUNCTION
1	12		1/4	10 K	2	B.J.M	E.C.M. DDEC
2	12		1/4	4.3 K	2	"	" "
3							
4	24		1/2	470 K	12	"	A/C TIME DELAY RELAY
5	12		10	F-101	6	B.J.A.	CORNERING LTS
6	12		10	F-101	7	B.J.AR	DOCKING LT - RH
7	12		10	F-101	7	B.J.AR.	DOCKING LT - LH
8	12		10	F-101	4	FR. SERV. CPT.	FR FOG - LH
9	12		10	F-101	4	FR. SERV. CPT.	FR. FOG - RH

RESISTOR							
RS #	VOLTAGE BEFORE	VOLTAGE AFTER	WATT	CATEGORY	DIAG. PAGE	LOCATION	FUNCTION

LEGEND

- FRONT JUNCTION PANEL
- REAR JUNCTION PANEL
- BATTERY COMPARTMENT
- CIRCUIT BREAKER
- HARNESS CONNECTOR
- BATTERY JUNCTION BLOCK
- SINGLE CONNECTOR
- DIODE (RECTIFIER)
- OPTION

ITEM	DATE	REVISION	PAR
B	88-03	MISE A JOUR "FUNCTION"	B.C.
A	88-03	ETAIT 1/J008	B.C.

TITRE : RESISTOR CODE

DESS: D.T. | DATE - 88-02 | VER. - | APPR. -

APPL: EFF. W/J009 | REF: H5-60 | NO: D-060660 H | C

SWITCH CODE

SWITCH

SW#	AMP.	VOLT.	DIAG. PAGE	LOCATION	DESCRIPTION	TYPE	SYMBOL
1		24	1	B.J.P	CUT OUT SW 24V		
2		12	1	"	" " " 12V		
3		24	1	DASH	FAST IDLE SW	SWF	
4		"	1	"	WEBASTO SW	"	
5		12	2	"	STOP ENGINE OVERRIDE	"	
6		12	2	"	CRUISE CTR ON/OFF	"	
7		"	"	"	CRUISE "RESUME" SW	"	
8		"	3	STEER CPT	ATEC TEST SW		
9		24	4	DASH	FOG LT	SWF	
10		"	"	STEER WHEEL	HORN BUTTON		
11		24	5	DASH	HEAD LAMP		
12		"	"	STEER WHEEL	MULTI-FUNCTION LEVEL		
13		24	"	DASH	HAZARD SW	SWF	
14		24	7	STEER CPT	STOP 'LT SW		
15		"	"	B.J. MOT	ENG. CPT LT SW		
16		"	"	CPT MOT	" " " "		
17		"	8	CPT STEER	STEERING CPT LT SW		
18		"	7	LUG CPT	BAGGAGE COMPT SW		
19		"	9	DASH CONS.6A	GENERAL LTS SW AND 24V FLUOR. SW	SWF	
20		"	9	" " "	READING LT SW (DRIVER'S)	SWF	
21							
22		24	9	DASH CONS.6A	DRIVER'S LT SW	SWF	
23		"	9	HAT RACK	READ LT SW (PASS)	IKI	
24		"	10	DASH	RHEOSTAT		
25		"	"	DASH CONS.6A	PASS. & HOSTESS CHIME (DRIVER'S)	SWF	
26		"	"	HAT RACK	PASS CHIME SW		
27		"	"	" "	HOSTESS CHIME SW		
28		"	11	DASH	FRESH AIR SW	SWF	
29		"	"	"	A/C & HEAT SW	SWF	
30		"	"	"	RHEOSTAT RR,CTR,T°		
31		"	12	"	RHEOSTAT FR,CTR,T°		
32							
33		"	13	"	RHEOSTAT - DRIV. HTR FAN		
34		"	13	"	" - DRIV. TEMP CTR		
35		"	14	"	REAR VIEW MIRROR ADJUSTING SW-LH		
36		"	14	"	REAR VIEW MIRROR ADJUSTING SW-RH		
37		"	14	"	HEATED MIRROR SW	SWF	

SWITCH

SW#	AMP.	VOLT.	DIAG. PAGE	LOCATION	DESCRIPTION	TYPE	SYMBOL
38		24	14	DASH	DRIVER'S LIFTER WINDOW	SWF	
39		"	16	TOILET	TOILET DOOR LOCK SW		
40		"	"	"	FLUSHING SW		
41		"	"	"	TOILET EMERGENCY SW		
42		"	"		DIFFERENTIAL LOCK SW		
43		"	3	CPT MOT	RETARDER SW		
44		"	17	DASH	UPPER DEFROSTER	SWF	
45		"	"	"	UPPER WINDSHIELD WIPER MOTOR CTR SW		
46		"	"	"	UPPER WINDSHIELD WASHER CTR SW	SWF	
47		"	18	"	RR & FR DOOR CTR SW	SWF	
48							
49		24	18	FR DOOR	FR DOOR CTR - DOOR PIVOT		
50		"	"	RR DOOR	RR DOOR CTR - DOOR PIVOT		
51		24	21	DASH	ETHER SW	SWF	
52		24	"	"	KNEELING	SWF	
53		"	"	ARTICULATION	ARTICULATION - TELL-TALE		
54		"	"	"	" - ALARM		
55		"	"	"	" - PARK		
56		"	"	"	" - VERT ALARM		
57		"	22	DASH	ARTICULATION BRAKE	SWF	
58		"	"	"	SEAT HEATER	SWF	
59		"	23	"	LUGGAGE DOOR LOCK SW	"	
60		"	"	LUG. CPT	LUGGAGE LOCK SW	KNIPEX	
61		"	23	DASH	SPEAKER CTR SW	CUTLER HAMMER	
62		"	"	"	RHEOSTAT P.A. VOLUME		
63			7	CPT STEERING	PARKING TILT SW		
64		12	2	DASH	CRUISE "SET" SW	SWF	
65		12	2	"	CRUISE "KILL" SW		
66		24	22	RR STEP CPT	CAMERA DOOR SYST.	JOG	
67							
68							

LEGEND

- FRONT JUNCTION PANEL
- REAR JUNCTION PANEL
- BATTERY COMPARTMENT
- CIRCUIT BREAKER
- HARNESS CONNECTOR
- BATTERY JUNCTION BLOCK
- SINGLE CONNECTOR
- DIODE (RECTIFIER)
- OPTION

ITEM	DATE	REVISION	PAR
B	88-03	MISE A JOUR 'DESCRIPTION'	B.C
A	88-03	ETAIT /J008	B.C

DESC: SWITCH CODE

DESS: D.T. | DATE - 88-02

VER. - | APPR. -

APPL: EFF. W/J009 ⚠ | REF: H5-60 | NO: D-060660 p. I | C

TELL-TALE LITE CODE

TELL-TALE LITE

TTL#	WATT	VOLT	DIAG. PAGE	LOCATION	DESCRIPTION	TYPE	SYMBOL
1		24	1	DASH	PARKING BRAKE		
2		"	"	"	WEBASTO-HEATER ON		
3		12	2	"	STOP ENGINE		
4		"	"	"	CHECK ENGINE		
5		"	"	"	CRUISE ENABLE		
6		24	3	"	CHECK TRANSMISSION		
7		"	4	"	LO-AIR (SEC.)		
8		"	"	"	LO-AIR (PRIM.)		
9		"	"	"	FIRE		
10		12	6	"	TURN SIGNAL RH		
11		"	"	"	" " LH		
12		24	5	"	HI-BEAM		
13		"	7	"	BRAKE		
14		"	11	"	NOT GENERATOR		
15		"	11	"	REAR HTR		
16		"	12	"	FRONT HTR		
17		"	"	"	LOW PRESSURE		
18		"	"	"	HI PRESSURE		
19		"	16	"	LOW FUEL		
20		"	"	"	TOILET		
21		"	"	"	DIFFERENTIAL LOCK		
22		"	3	"	RETARDER		
23		"	18	"	RR DOOR		
24							
25		12	19	DASH	ANTI-SKID		
26		24	21	"	KNEELING		
27		"	23	"	LUGGAGE DOOR LOCK		
28		"	21	"	ARTICULATION TTLT		
29		"	11	"	REAR COOL		
30		"	11	"	FRONT COOL		
31		"	8	"	DOOR AJAR		

TELL-TALE LITE

TTL#	WATT	VOLT	DIAG. PAGE	LOCATION	DESCRIPTION	TYPE	SYMBOL

LEGEND

- FRONT JUNCTION PANEL
- REAR JUNCTION PANEL
- BATTERY COMPARTMENT
- CIRCUIT BREAKER
- HARNESS CONNECTOR
- BATTERY JUNCTION BLOCK
- SINGLE CONNECTOR
- DIODE (ARSTYNER)
- OPTION

ITEM	DATE	REVISION	PAR
C	91-02	MISE A JOUR	M
B	88-03	MISE A JOUR	B.C.
A	88-03	ETAIT 1/J008	B.C.

DESC: TELL-TALE LITE CODE

DESS: D.T. DATE: 88-02

VER.: MC APPR.:

APPL: EFF. W/ J009 ⚠ PRIOR L034 REF: H5-60

NO: D-060660 p. J

WIRING DIAGRAM CODE H5-60

+ | | −	BATTERY
	GROUND
	METER GAUGE
N.O. / N.C.	MOMENTARY CONTACT PUSH BUTTON SWITCH
	BUZZER
S	SOLENOID
	BELL
	VALVE
	HEATER
R, B	MAGNETIC SWITCH RELAY
85, R, 86, 30, 87	MINI-RELAY N.O.
85, R, 86, 30, 87, 87A	MINI-RELAY N.O (87) AND N.C. (87A)
85, R, 86, 30, 87A	MINI-RELAY N.C
	WIRES CROSSING
	WIRES WELDING

CB-9, 8A	CIRCUIT BREAKER
FUSE #1, 8A	FUSE
D-1	DIODE
	JUNCTION TERMINAL BLOCK
	THERMOSTAT
P	PUMP
LT	LIGHT
F	FLASHER

	CONNECTOR SOCKET PIN

LEGEND

FRONT JUNCTION PANEL	BATTERY JUNCTION BLOCK
REAR JUNCTION PANEL	CABLE CONNECTOR
BATTERY COMPARTMENT	DIODE (RECTIFIER)
CIRCUIT BREAKER	OPTION
ADDRESS CONNECTOR	

ITEM	DATE	REVISION	PAR
B	88-04	C.O. #13886	B.C.
A	88-03	ETAIT /J008	

DESC: WIRING DIAGRAM

DESS: D.V. | DATE: 88-02 | VER.- | APPR.-

APPL: EFF. W/J009 △1 | REF: H5-60 | NO: D-060660-P.K | C

WIRING DIAGRAM INDEX H5-60

A/C AND HEAT SYSTEM	PAGE	11,12,13
AIR DRYER	P.	22
ALARM AND SIGNAL	P.	4
ANTI-SKID	P.	19,20
ARTICULATION BRAKE	P.	22
ARTICULATION SWITCH	P.	21
BACK UP MONITOR	P.	22
CHARGING SYSTEM	P.	1
CIGAR LIGHTER	P.	14
CRUISE CONTROL	P.	2
DIFFERENTIAL LOCK	P.	16
DIGITAL THERMOMETER	P.	23
DRIVER'S SEAT HEATER	P.	22
DRIVER'S WINDOW	P.	14
ENGINE CONTROL	P.	1
ENTRANCE DOOR CONTROL (FRONT & REAR)	P.	18
EXTERIOR LIGHTING	P.	4,5,6,7
HEATED MIRROR	P.	14
HOSTESS CHIME	P.	10
INTERIOR LIGHTING	PAGE	7,8,9,10
KNEELING	P.	21
LOWER WINDSHIELD (WIPER & WASHER)	P.	17
LUGGAGE DOOR LOCK	P.	23
MOTOR HEATER	P.	23
PASSENGER CHIME	P.	10
QUICK START	P.	21
REAR VIEW MIRROR	P.	14
RETARDER	P.	3
SOUND SYSTEM	P.	24
TACHOGRAPHE	P.	16
TOILET	P.	16
UPPER WINDSHIELD DEFROST	P.	17
UPPER WINDSHIELD (WIPER & WASHER)	P.	17
WATER TANK HEATER	P.	23
LOW FUEL	P.	16
FRONT DESTINATION SIGN.	P.	15
STORE	P.	15
RACOR FUEL FILTER	P.	21

LEGEND

FRONT JUNCTION PANEL	BATTERY JUNCTION BLOCK
REAR JUNCTION PANEL	SINGLE CONNECTOR
BATTERY COMPARTMENT	DIODE (RECTIFIER)
CIRCUIT BREAKER	OPTION
HARNESS CONNECTOR	

ITEM	DATE	REVISION	PAR
A	88-03	ETAIT 1J008	BC

DESC: WIRING DIAGRAM H5-60

DESS: D.V. DATE- 88-02 VER.- APPR.-

APPL: EFF. W/ J009 △ REF: H5-60 NO: D-060660 p. L C

WIRING DIAGRAM INDEX H5-60

A/C AND HEAT SYSTEM	PAGE	11,12,13
AIR DRYER	P.	22
ALARM AND SIGNAL	P.	4
ANTI-SKID	P.	19,20
ARTICULATION BRAKE	P.	22
ARTICULATION SWITCH	P.	21
BACK UP MONITOR	P.	22
CHARGING SYSTEM	P.	1
CIGAR LIGHTER	P.	14
CRUISE CONTROL	P.	2
DIFFERENTIAL LOCK	P.	16
DIGITAL THERMOMETER	P.	23
DRIVER'S SEAT HEATER	P.	22
DRIVER'S WINDOW	P.	14
ENGINE CONTROL	P.	1
ENTRANCE DOOR CONTROL (FRONT & REAR)	P.	18
EXTERIOR LIGHTING	P.	4,5,6,7
HEATED MIRROR	P.	14
HOSTESS CHIME	P.	10
INTERIOR LIGHTING	PAGE	7,8,9,10
KNEELING	P.	21
LOWER WINDSHIELD (WIPER & WASHER)	P.	17
LUGGAGE DOOR LOCK	P.	23
MOTOR HEATER	P.	23
PASSENGER CHIME	P.	10
QUICK START	P.	21
REAR VIEW MIRROR	P.	14
RETARDER	P.	3
SOUND SYSTEM	P.	24
TACHOGRAPH	P.	16
TOILET	P.	16
UPPER WINDSHIELD DEFROST	P.	17
UPPER WINDSHIELD (WIPER & WASHER)	P.	17
WATER TANK HEATER	P.	23
LOW FUEL	P.	16
FRONT DESTINATION SIGN.	P.	15
SUN VISOR	P.	15
RACOR FUEL FILTER	P.	21

PREVOST

LEGEND

FRONT JUNCTION PANEL		BATTERY JUNCTION BLOCK	
REAR JUNCTION PANEL		SINGLE CONNECTOR	
BATTERY COMPARTMENT	-N-	DIODE (RECTIFIER)	
CIRCUIT BREAKER	----	OPTION	
HARNESS CONNECTOR			

THIS DOCUMENT IS THE EXCLUSIVE PROPERTY OF PREVOST CAR INC. STE-CLAIRE, QUE. IT MAY NOT BE USED OR REPRODUCED, NOR ITS CONTENT OR PART THEREOF DISCLOSED TO OTHERS BY ANY PERSON OR COMPANY EXCEPT WITH THE EXPRESS CONSENT OF WRITTEN FROM PREVOST CAR INC.

ITEM	DATE	REVISION	PAR
B	91-10	SUN VISOR ETAIT STORE	MJ
A	88-03	ETAIT 1J008	BC

DESC: WIRING DIAGRAM

DESS: D.V. | DATE: 88-02 | VER.: | APPR.:

APPL: EFF. W/ J009 ⚠ PRIOR L034 | REF: H5-60 | NO: D-060660 p. L | C

WIRING DIAGRAM INDEX H5-60

A/C AND HEAT SYSTEM	PAGE	11,12,13
AIR DRYER	P.	22
ALARM AND SIGNAL	P.	4
ANTI-SKID	P.	19,20
ARTICULATION BRAKE	P.	22
ARTICULATION SWITCH	P.	21
BACK UP MONITOR	P.	22
CHARGING SYSTEM	P.	1
CIGAR LIGHTER	P.	14
CRUISE CONTROL	P.	2
DIFFERENTIAL LOCK	P.	16
DIGITAL THERMOMETER	P.	23
DRIVER'S SEAT HEATER	P.	22
DRIVER'S WINDOW	P.	14
ENGINE CONTROL	P.	1
ENTRANCE DOOR CONTROL (FRONT & REAR)	P.	18
EXTERIOR LIGHTING	P.	4,5,6,7
HEATED MIRROR	P.	14
HOSTESS CHIME	P.	10
INTERIOR LIGHTING	PAGE	7,8,9,10
KNEELING	P.	21
LOWER WINDSHIELD (WIPER & WASHER)	P.	17
LUGGAGE DOOR LOCK	P.	23
MOTOR HEATER	P.	23
PASSENGER CHIME	P.	10
QUICK START	P.	21
REAR VIEW MIRROR	P.	14
RETARDER	P.	3
SOUND SYSTEM	P.	24
TACHOGRAPH	P.	16
TOILET	P.	16
UPPER WINDSHIELD DEFROST	P.	17
UPPER WINDSHIELD (WIPER & WASHER)	P.	17
WATER TANK HEATER	P.	23
LOW FUEL	P.	16
FRONT DESTINATION SIGN.	P.	15
SUN VISOR	P.	15
RACOR FUEL FILTER	P.	21

LEGEND

FRONT JUNCTION PANEL
REAR JUNCTION PANEL
BATTERY COMPARTMENT
CIRCUIT BREAKER
HARNESS CONNECTOR
BATTERY JUNCTION BLOCK
SINGLE CONNECTOR
DIODE (RECTIFIER)
OPTION

ITEM	DATE	REVISION	PAR
C	91-10	SUN VISOR ETAIT STORE	MJ
B	88-02	LANCE	DV
A	87-04	CORR. PRELIMINAIRE	P.C.

TITRE: WIRING DIAGRAM H5-60

DESS: P.C. | DATE: 87-04
VER.- | APPR.-
APPL: EFF. W/ J001 PRIOR TO J009 | REF: H5-60 | NO: D-060566 p. L | C

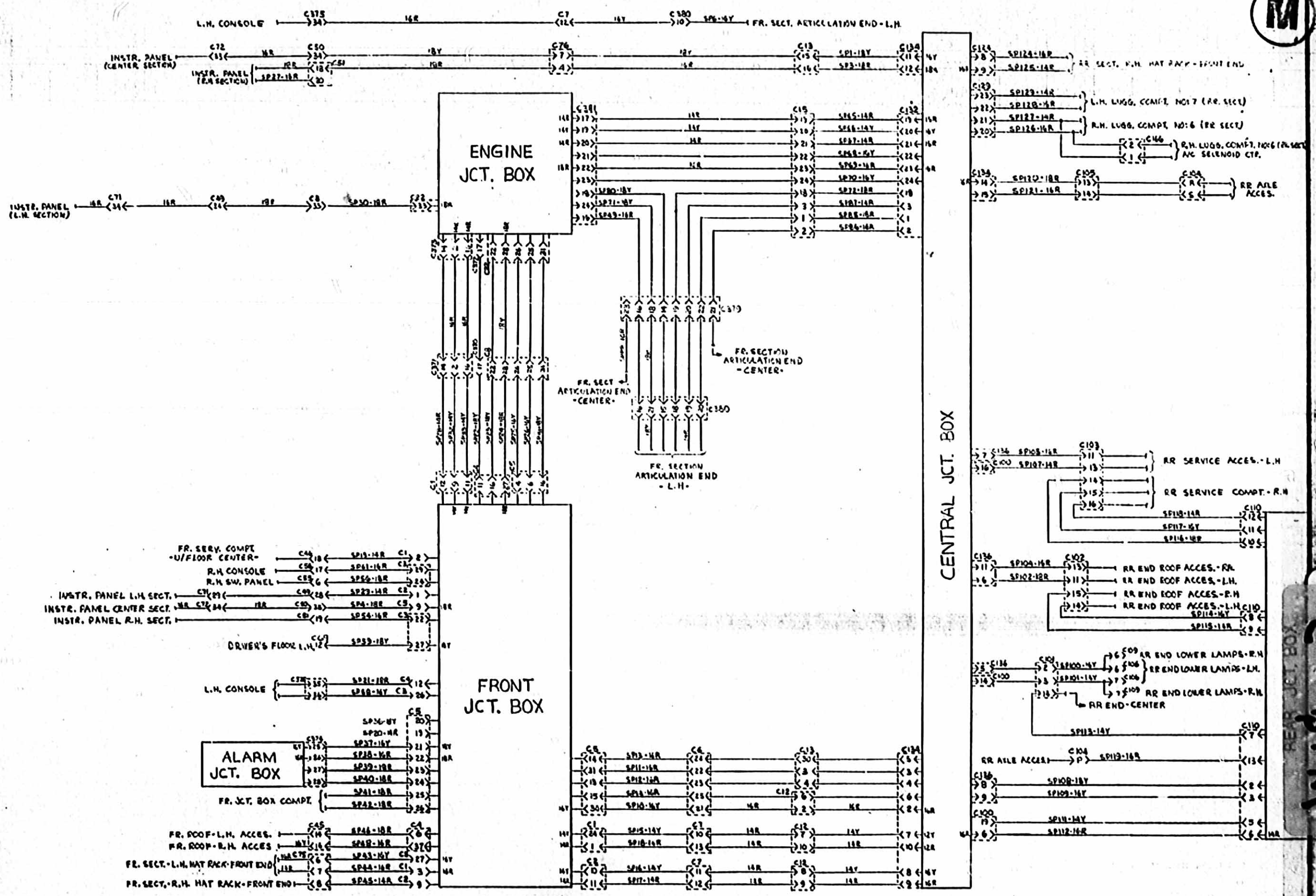

ITEM	DATE	REVISION	BY
A	91-02	MIGS A JOUR	ML

DESCRIPTION: SPARE WIRES

APPL: EFF. W/ J009 PRIOR TO: L033 REF:

DR. M.J. CK. K.C. DATE- 88/05/30 APPR.-

NO: D-060660 P.M C

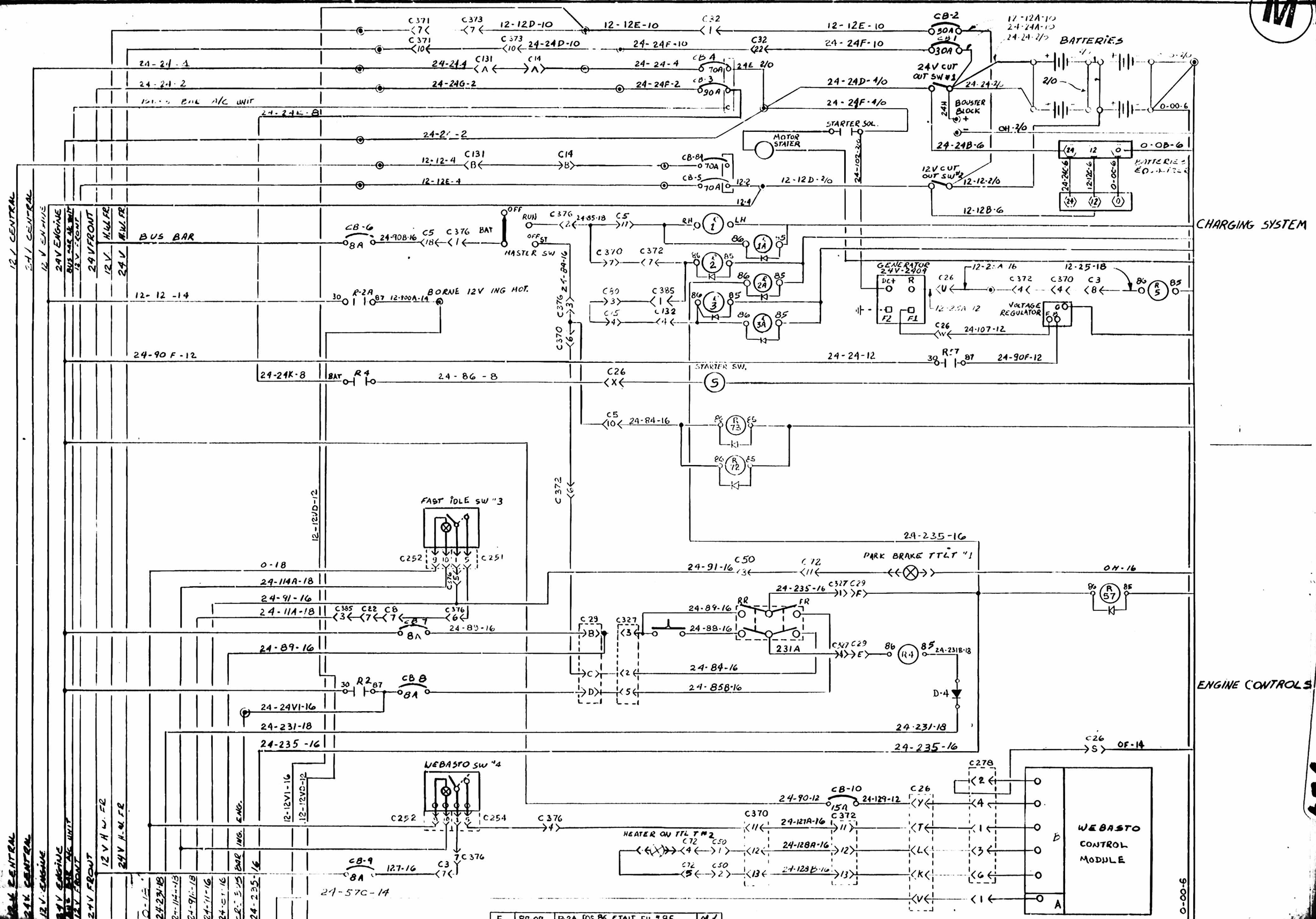

ITEM	DATE	REVISION	PAR
F	88-08	R-2A, POS.86 ETAIT FIL #85	M.L
E	88-06	MISE A JOUR	M.L
D	88-05	MISE A JOUR	B.C.
C	88/04	C.D.# 13920	M.L
B	88/03	D-4 AJOUTÉ	M.L
A	88/03	R72 & R73 AJOUTÉS	M.L

DESC: WIRING DIAGRAM

DESS: D.V.

DATE: 88-02

VER.: C

APPL: EFF. W/J009

REF: H5-60

NO: D-060660 1/24 C

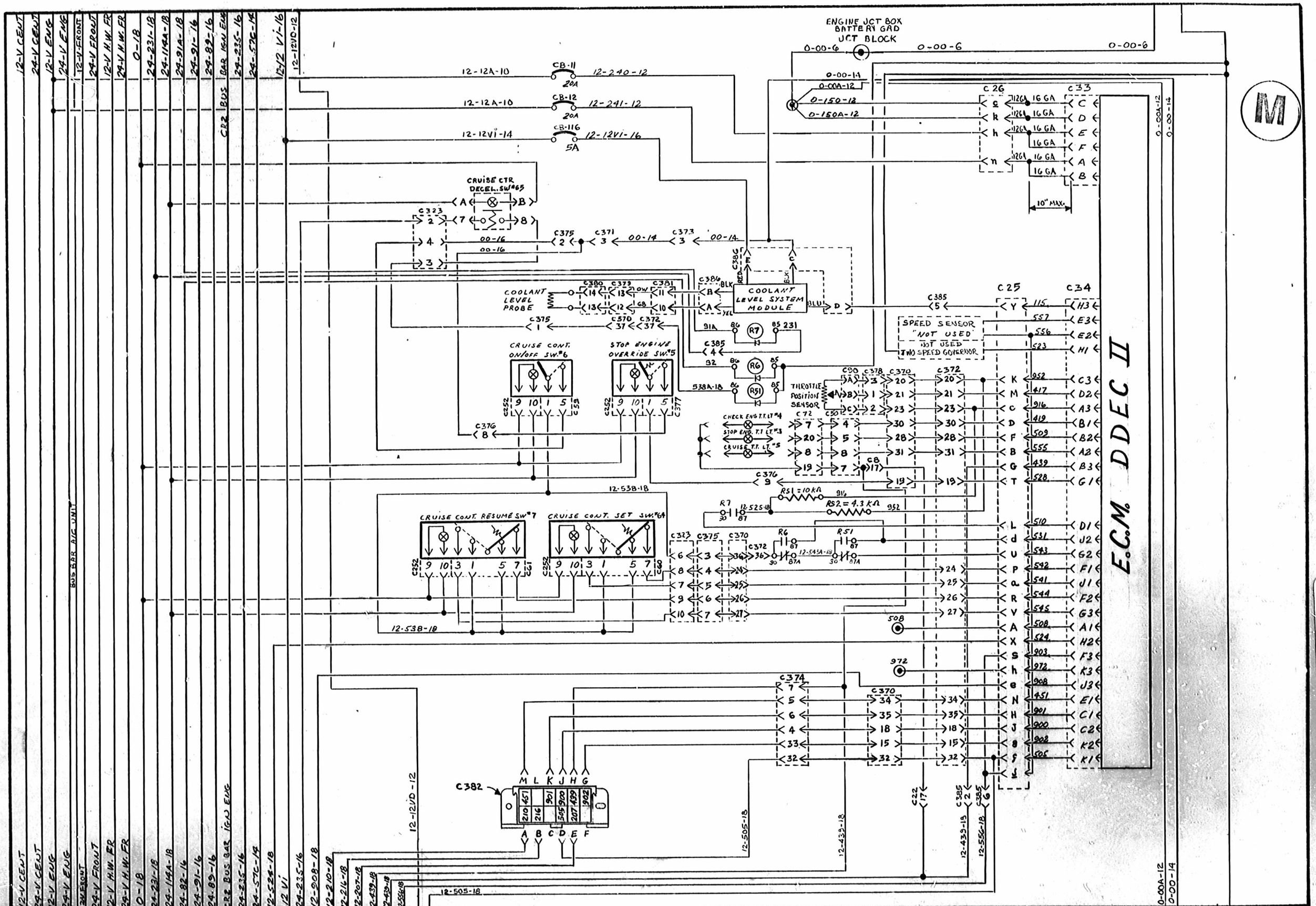

PREVOST LEGEND			
FRONT JUNCTION PANEL	BATTERY JUNCTION BLOCK		
REAR JUNCTION PANEL	SINGLE CONNECTOR		
BATTERY COMPARTMENT	DIODE (RECTIFIER)		
CIRCUIT BREAKER	OPTION		
HARNESS CONNECTOR			

THIS DOCUMENT IS THE EXCLUSIVE PROPERTY OF PREVOST CAR INC. (PVC). IT MAY NOT BE USED, OR REPRODUCED, NOR THE CONTENT OR PART THEREOF DISCLOSED TO OTHERS BY ANY PERSON OR COMPANY SAVE WITH THE EXPRESS CONSENT IN WRITING FROM PREVOST CAR INC.

ITEM	DATE	REVISION	PAR
C	88-05	MISE À JOUR	M.J.
B	88-05	MISE A JOUR	B.C.
A	88-03	ETAIT 1J008	B.C.

DDEC II WIRING DIAGRAM

DESS: D.V. | DATE: 88-02
VER.: C | APPR.:
APPL: VER. EFF. J009 | REF: H5-60
NO: D-060660 2/24 | C

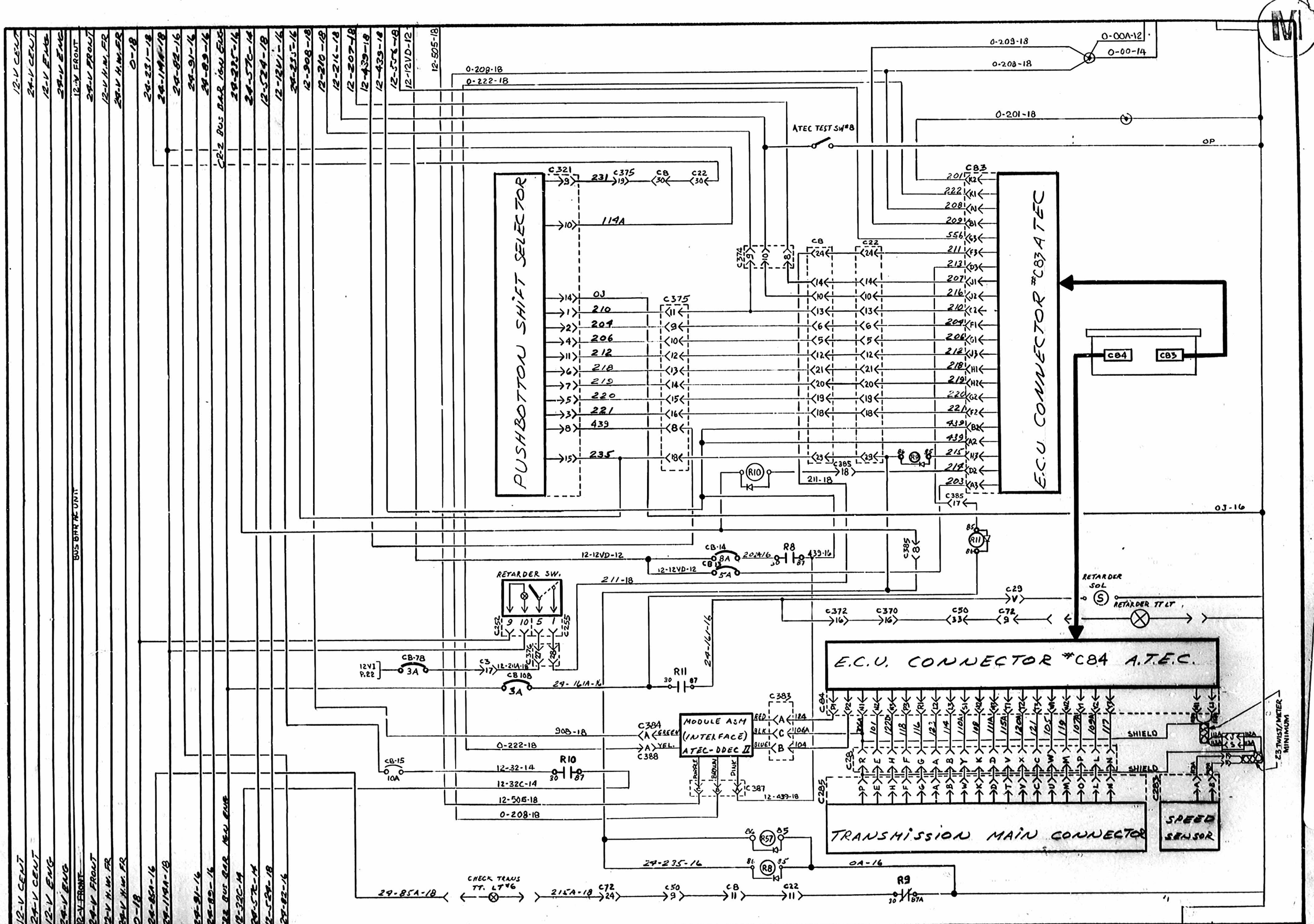

LEGEND			
FRONT JUNCTION PANEL		BATTERY JUNCTION BLOCK	
REAR JUNCTION PANEL		SINGLE CONNECTOR	
BATTERY COMPARTMENT		DIODE (RECTIFIER)	
CIRCUIT BREAKER		OPTION	
HARNESS CONNECTOR			

THIS DOCUMENT IS THE EXCLUSIVE PROPERTY OF PREVOST CAR INC. THIS DOCUMENT MAY NOT BE COPIED OR REPRODUCED, IN WHOLE OR IN PART, NOR MAY IT BE SHOWN OR MADE AVAILABLE TO OTHERS BY ANY MEANS WITHOUT THE EXPRESS CONSENT IN WRITING FROM PREVOST CAR INC.

ITEM	DATE	REVISION	PAR
E	88-10	MISE A JOUR	M.L
D	88-06	MISE A JOUR	M.L
C	88-05	MISE A JOUR	B.C.
B	88-03	C.D.# 13753	B.C.
A	88-03	ETAIT 1J008	B.C

DESC : ATEC WIRING DIAGRAM

APPL: VEH. EFF. J009 A

REF: H5-60

DESS: P.V.

VER.- C

DATE- 88-02

APPR.-

NO: D-060660 3/24 C

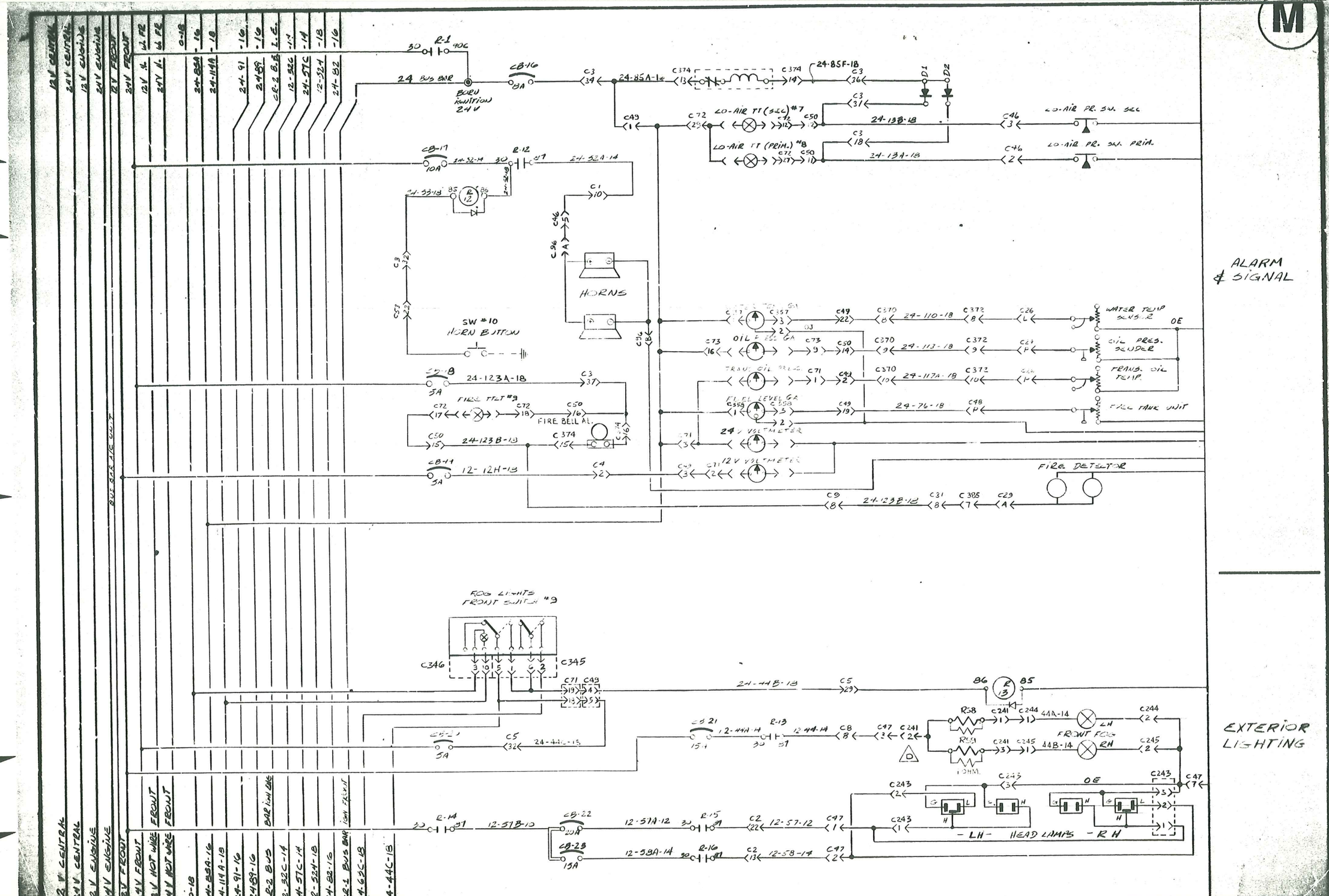

ITEM	DATE	REVISION	PAR
D	89-10	C.D. # 17497	SL
C	88-06	MISE A JOUR	
B	88-03	C.D. 13753	B.C
A	88-03	ETAIT /J008	B.C

WIRING DIAGRAM

APPL: EFF. W/J009 (A) | REF: H5-60

DESS: D.T. | DATE: 88-02

VER.- NC

NO: D-060660

17"

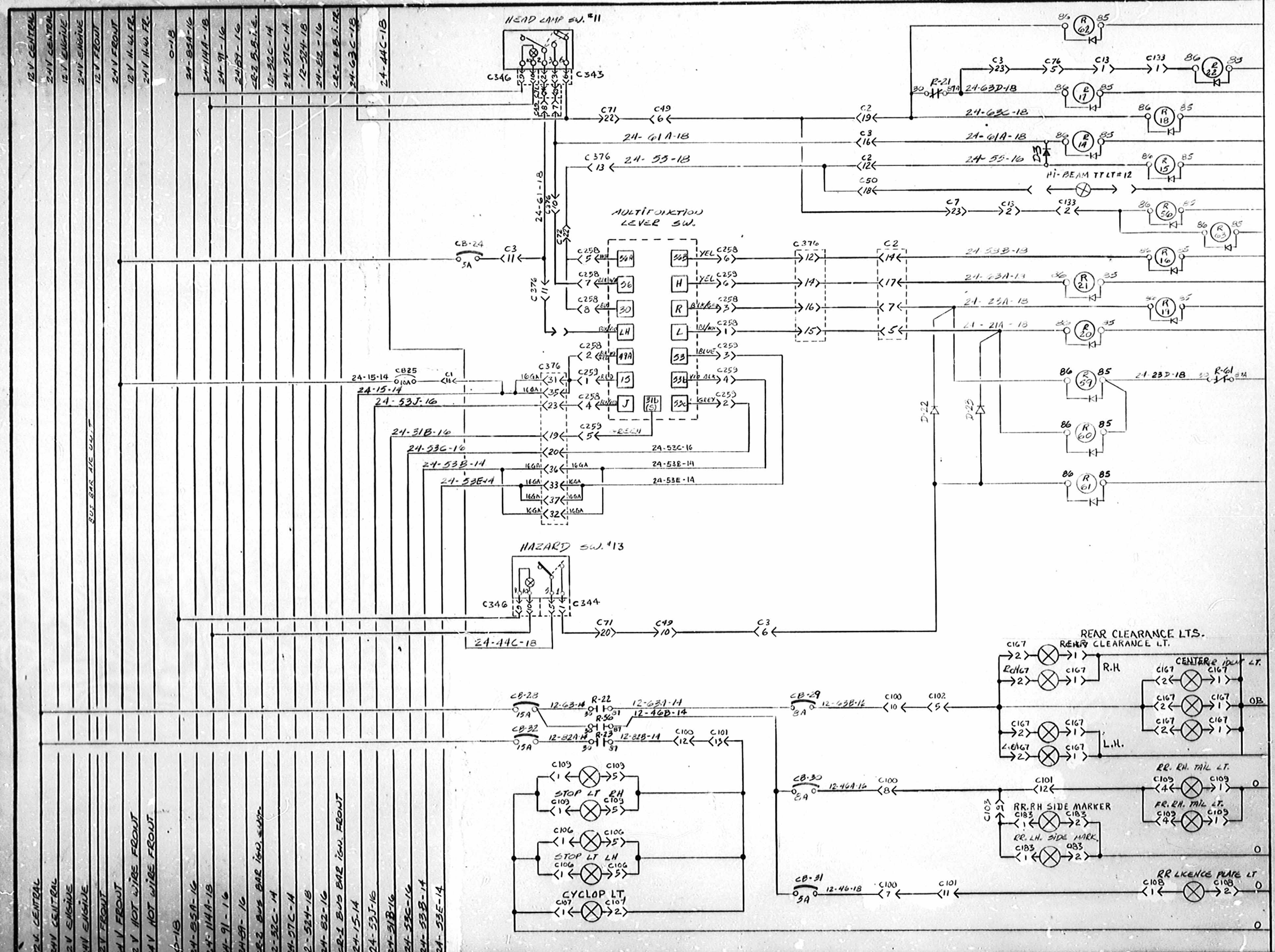

ITEM	DATE	REVISION	PAR
C	88-06	MISE A JOUR	M.L.
B	88-03	C.D. #13753	B.C.
A	88-03	ETAIT 1J008	B.C.

DESC: WIRING DIAGRAM

DESS: D.T. | DATE: 88-02

VER.: - | APPR.: -

APPL: EFF. W/J009 △

REF: H5-60

NO: D-060660 5/24 C

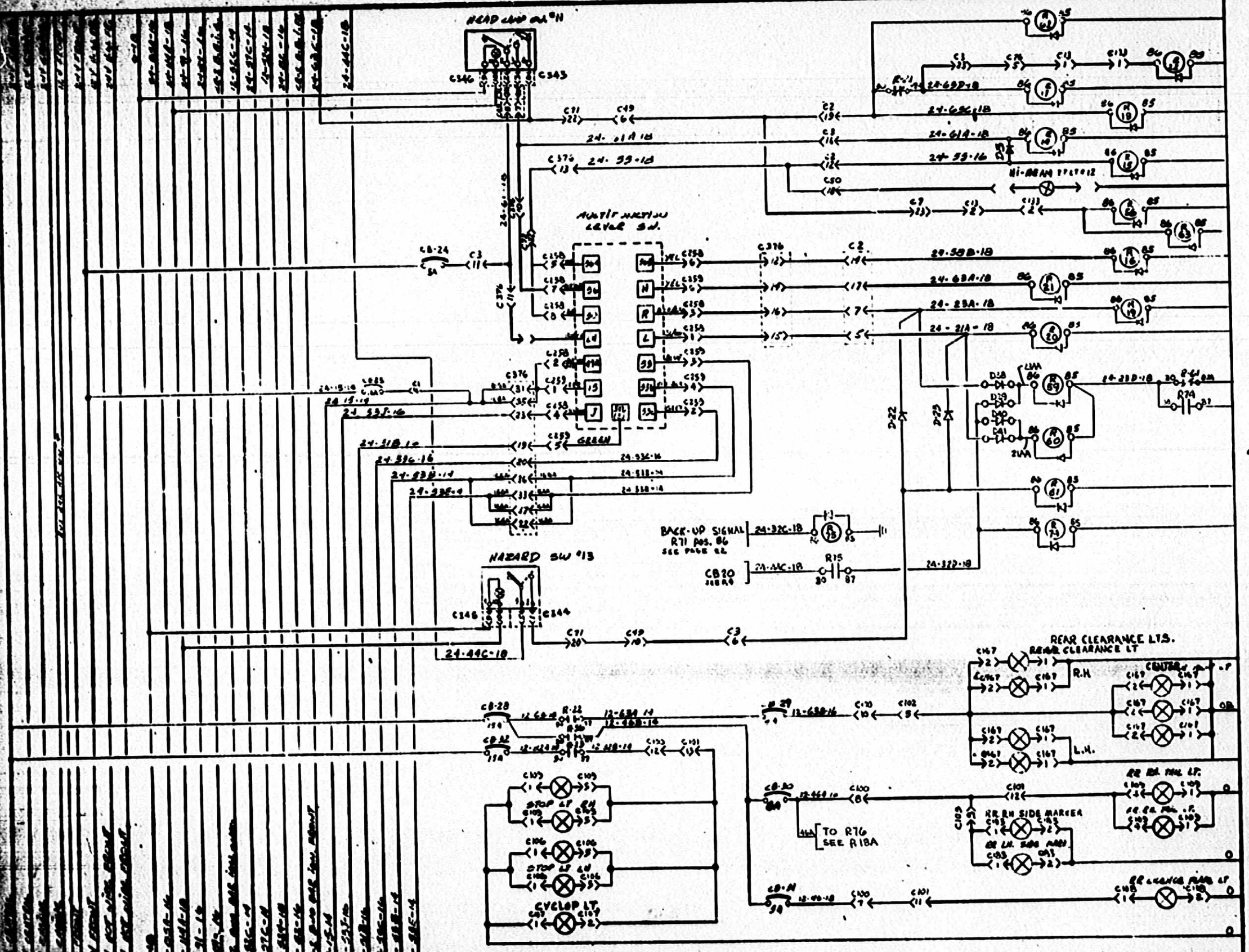

B	90/11	FIL ALA (ENGR. TO R76 ADDED)	MJ
A	89/09	CHANGE OF # 89162	MJ
REV.	DATE	REVISION	

DESC: WIRING DIAGRAM

DESS: M.J. DATE: 89-09

VER: lc

APPL: EFF. W/J009 PRIOR L034

REF: H5-60 "SPECIAL" VOYAGEUR

NO: D-060660 SA

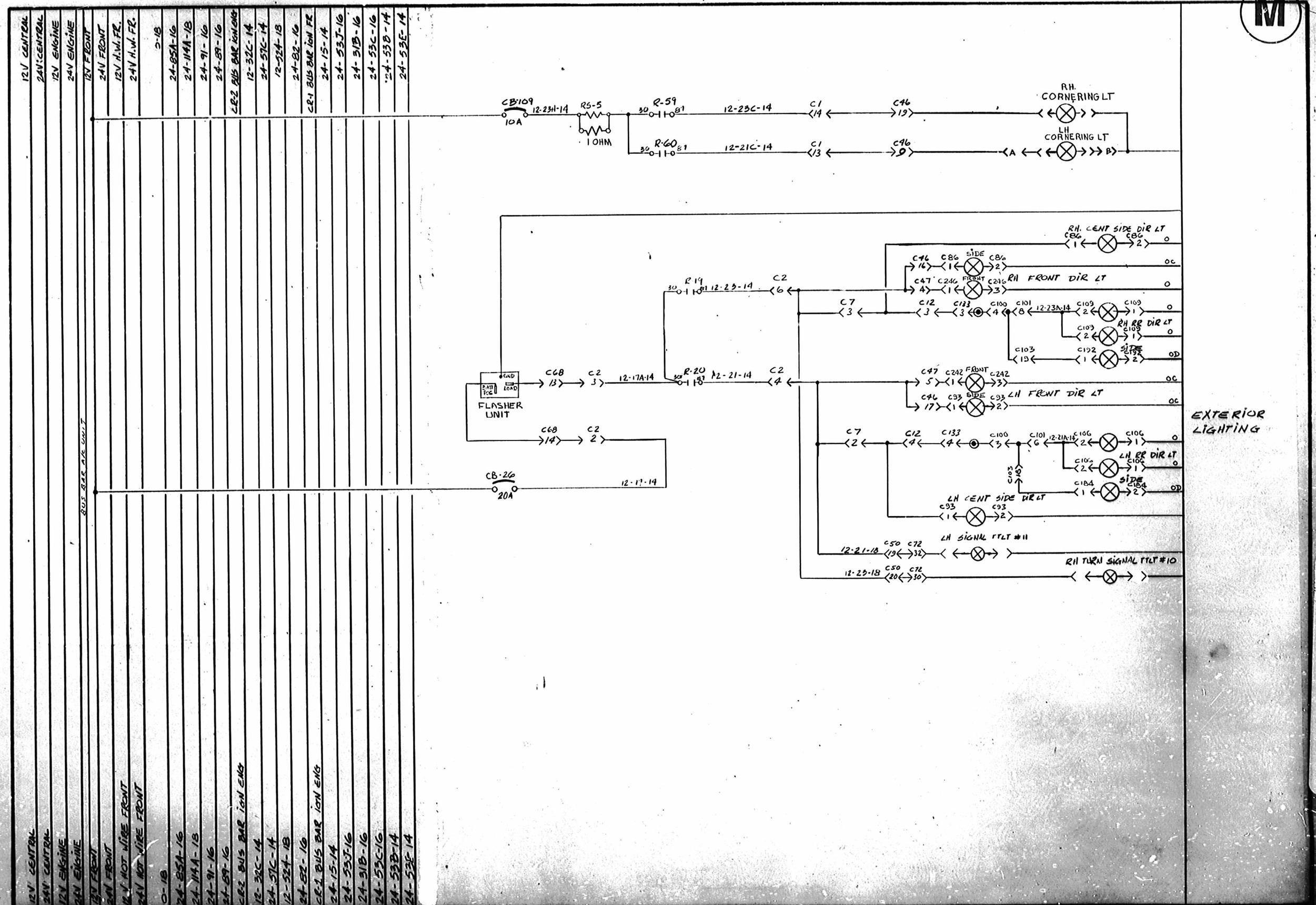

LEGEND

FRONT JUNCTION PANEL	BATTERY JUNCTION BLOCK
REAR JUNCTION PANEL	SINGLE CONNECTOR
BATTERY COMPARTMENT	DIODE (RECTIFIER)
CIRCUIT BREAKER	OPTION
HARNESS CONNECTOR	

ITEM	DATE	REVISION	PAR
C	88-07	OC# 68112 CD# 14726 ETNT J009	M.L.
B	88-03	C.D. # 13753	B.C.
A	03-88	ETAIT / J008	B.C.

DESC: WIRING DIAGRAM

APPL: EFF. W/K020

REF: HS-60

DESS: D.V.

VER.-

DATE- 88-02

APPR.

NO: D-060660 6/64 C

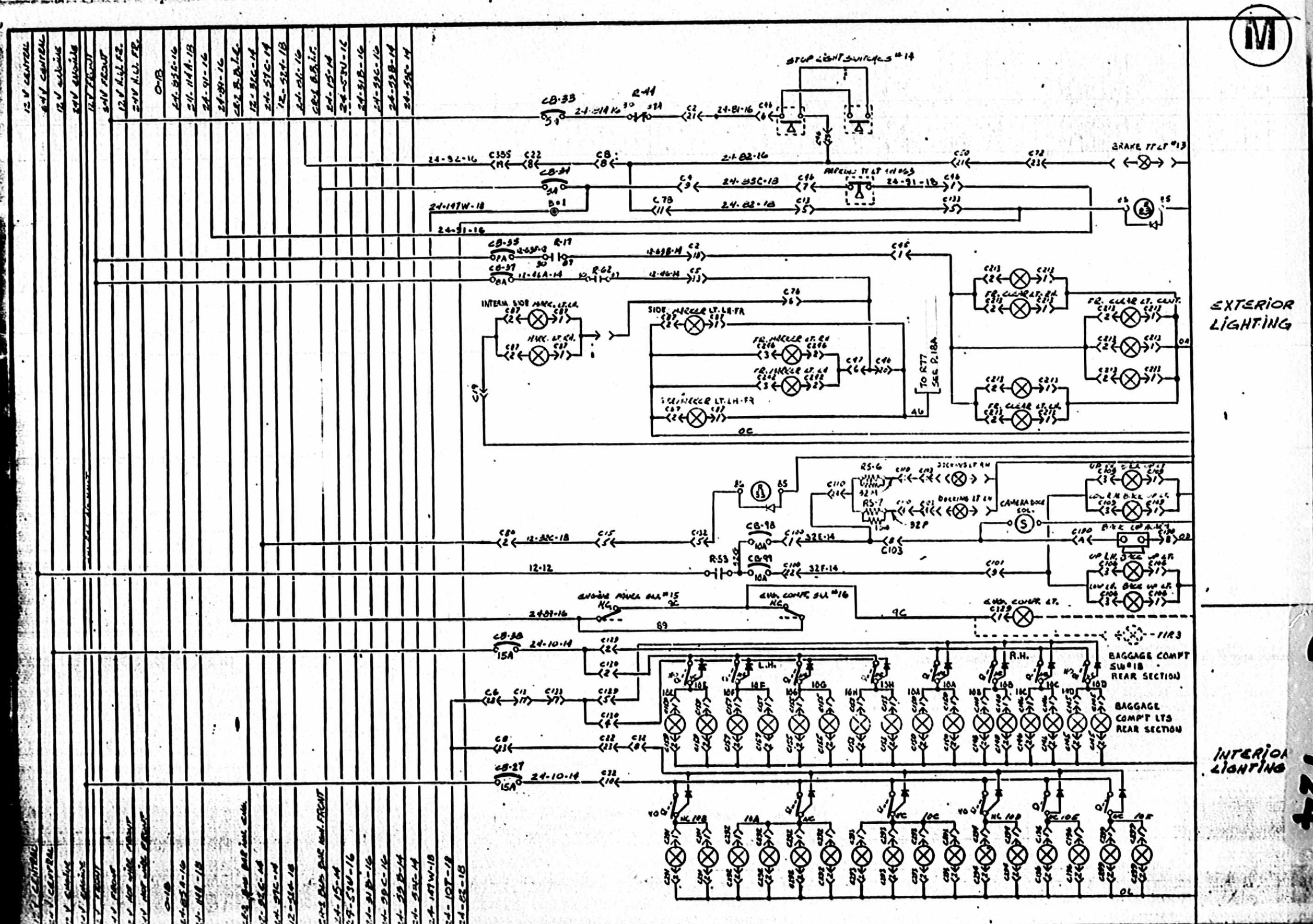

ITEM	DATE	REVISION	PAR
D	90/11	FIL 46 (TO R77 ADDED)	MJ
C	89-05	CB38 & CB27 RATING 10A	MJ
B	88-03	CD# 13753	BC
A	88-03	ETAIT / J008	B.C

DESC: WIRING DIAGRAM

APPL: EFF. W/J009 ⚠ PRIOR L034

REF: H5-60

DESS: D.V. DATE: 88-02

VER: 1/C APPR:

NO: D-060660 7/24

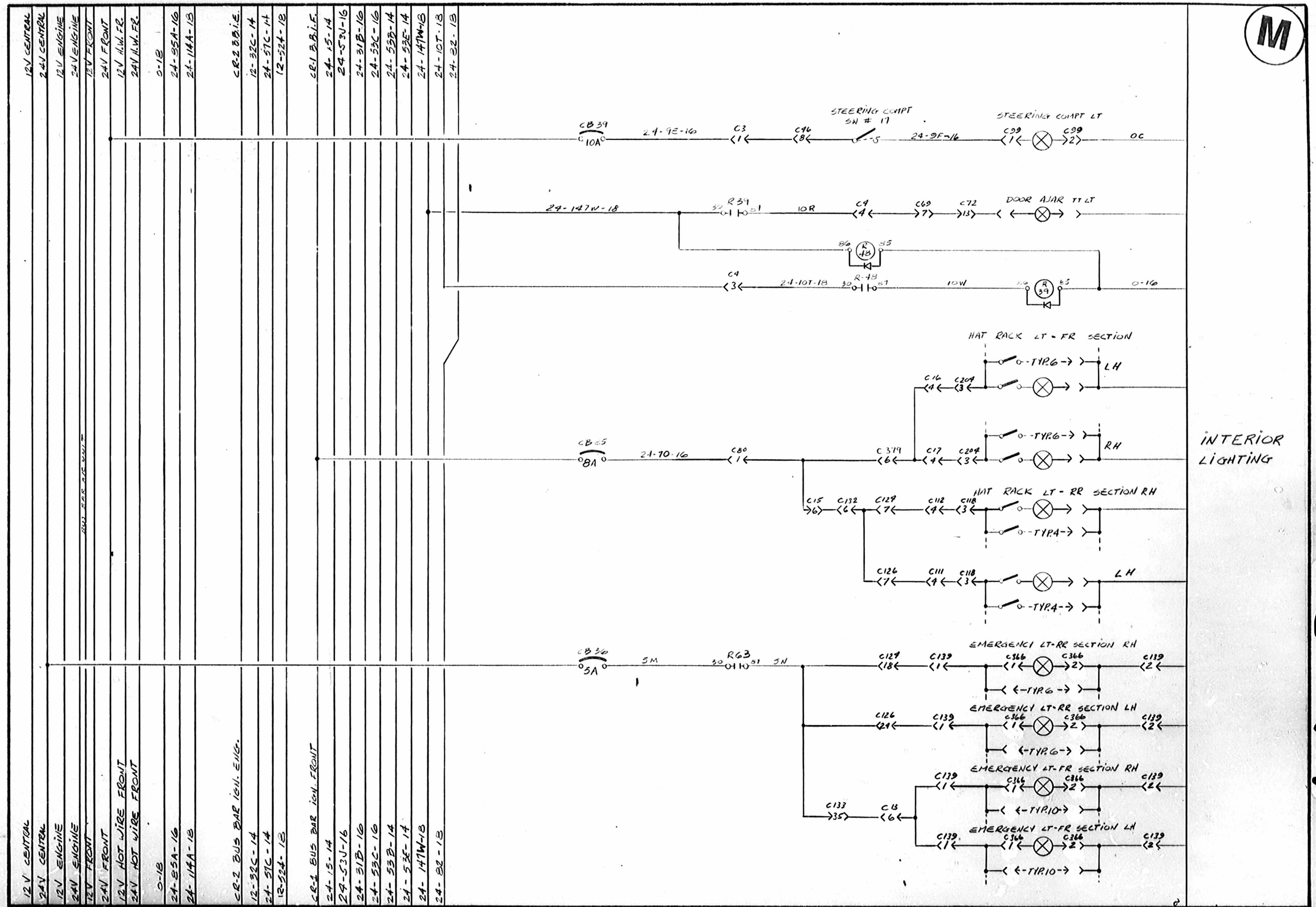

PREVOST

LEGEND

FRONT JUNCTION PANEL	BATTERY JUNCTION BLOCK
REAR JUNCTION PANEL	SINGLE CONNECTOR
BATTERY COMPARTMENT	DIODE (RECTIFIER)
CIRCUIT BREAKER	OPTION
HARNESS CONNECTOR	

THIS DOCUMENT IS THE EXCLUSIVE PROPERTY OF PREVOST CAR INC. ANY REPRODUCTION OR DISCLOSURE TO OTHERS BY ANY PERSON OR COMPANY SHALL BE MADE WITH THE EXPRESS CONSENT IN WRITING FROM PREVOST CAR INC.

ITEM	DATE	REVISION	PAR
B	88-05	CB85 ETAN 5A	MJ
A	88-03	ETAIT 1J008	BC

DESC: WIRING DIAGRAM

APPL: EFF. W/J009 A

REF: H5-60

DESS: D.V.

DATE: 88-02

VER.-

APPR.-

NO: D-060660 8/24 C

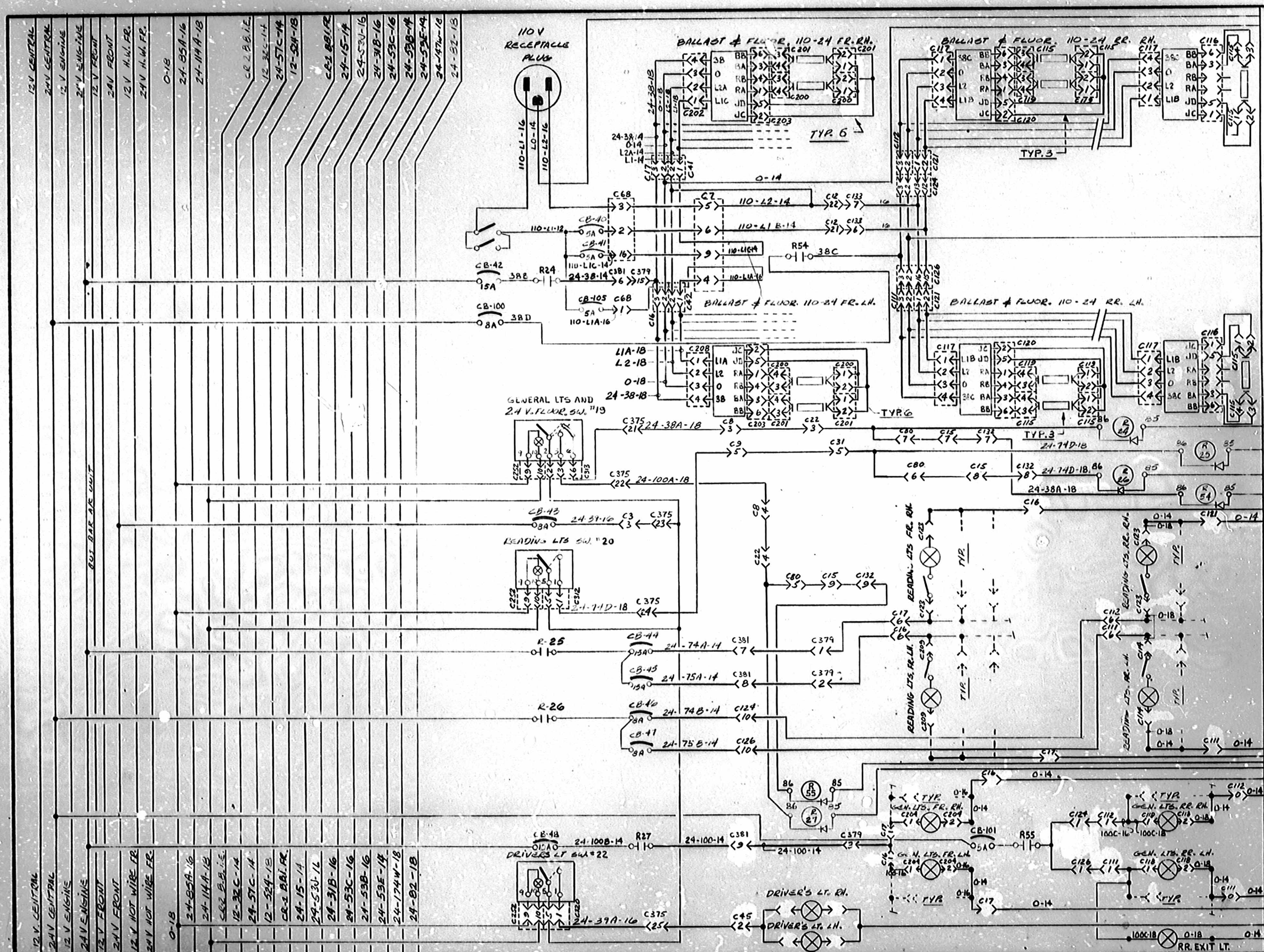

LEGEND

FRONT JUNCTION PANEL	BATTERY JUNCTION BLOCK
REAR JUNCTION PANEL	CABLE CONNECTOR
BATTERY COMPARTMENT	DIODE (RECTIFIER)
CIRCUIT BREAKER	OPTION
HARNESS CONNECTOR	

ITEM	DATE	REVISION	PAR
A	88-03	ÉTAIT /J008	B.C.

DESC: WIRING DIAGRAM H5-60

APPL: EFF. W/J009 A

REF: H5-60

DESS: D.V.

DATE: 88-02

VER.:

APPR.:

NO: D-060660 9/24 C

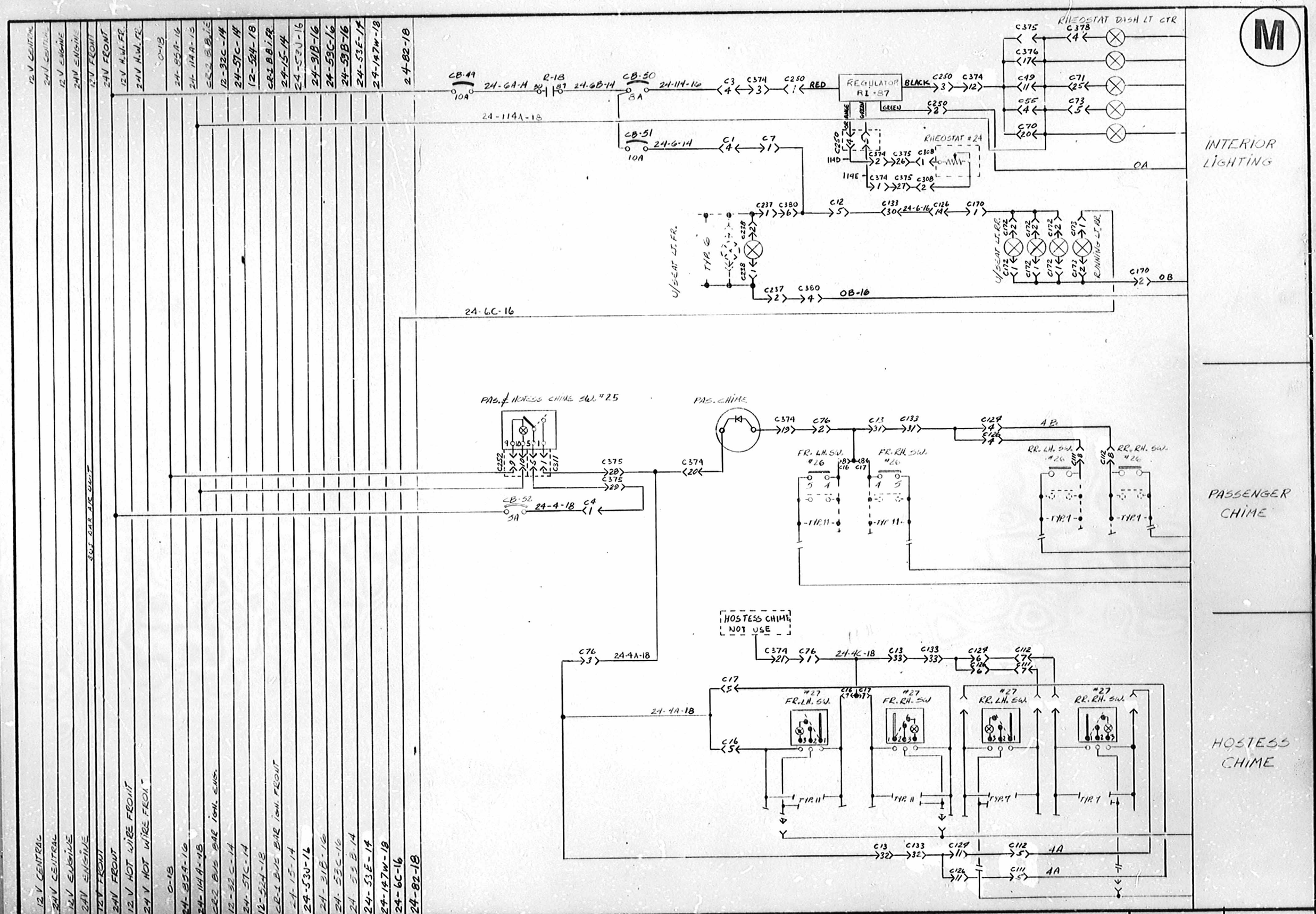

ITEM	DATE	REVISION	PAR
A	88-03	ETAIT 1J008	B.C

DESC: WIRING DIAGRAM H5-60

APPL: EFF. W/J009 △ | REF: H5-60

DESS: D.V. | DATE- 88-02

VER.- | APPR.-

NO: D-060660 10/24 | C

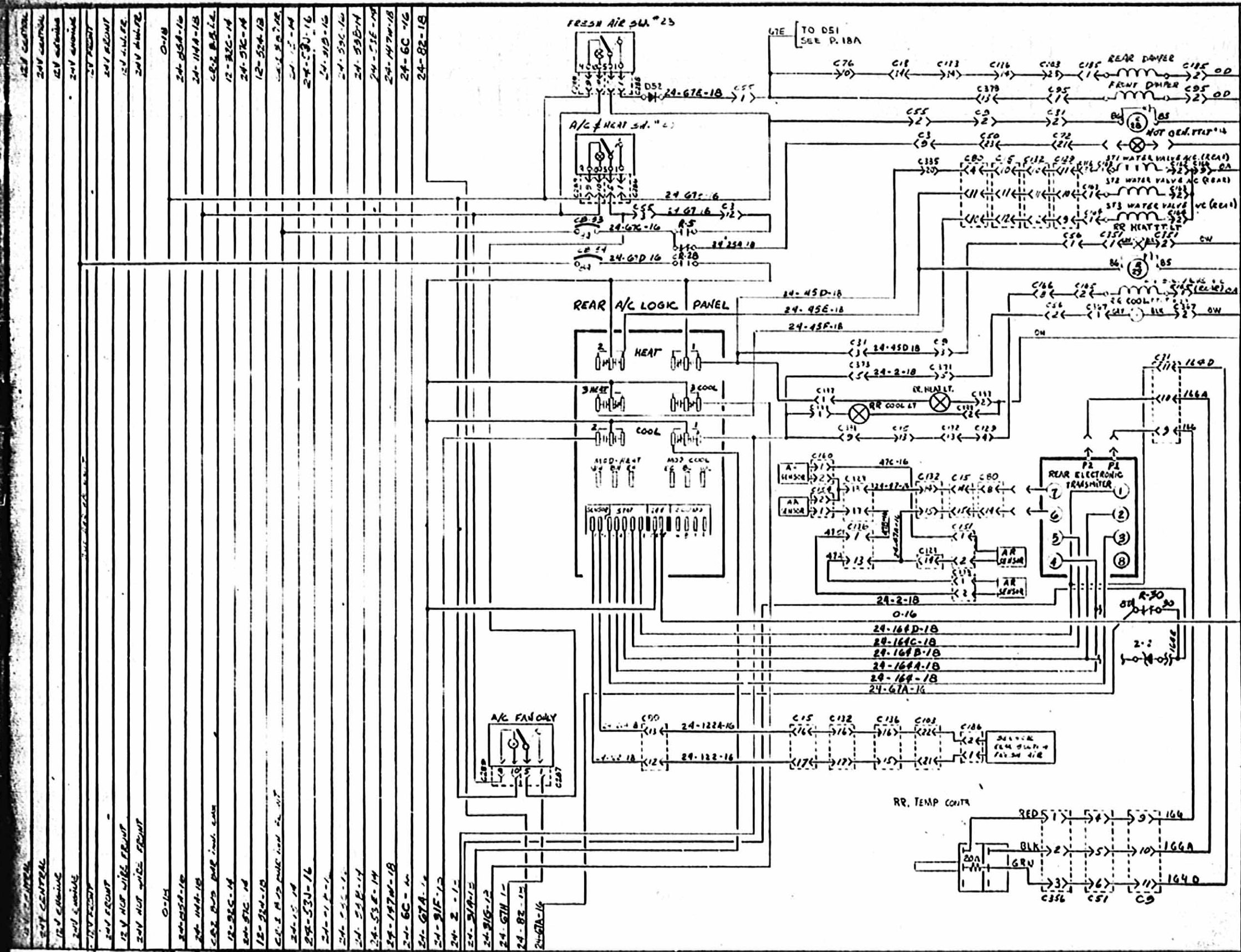

ITEM	DATE	REVISION	PAR
B	90/11	D52, & EMBR. D67E TO D51	MJ
A	89/11	LANCE	SB

DESC: WIRING DIAGRAM

DESS: S.B. DATE: 89/11 VER.: KC APPR.: RL

APPL: H5-60 VEH. EFF. J009 PRIOR TO L034 REF: SPECIAL VOYAGEUR RETROFIT NO: D-060660 11/24 C

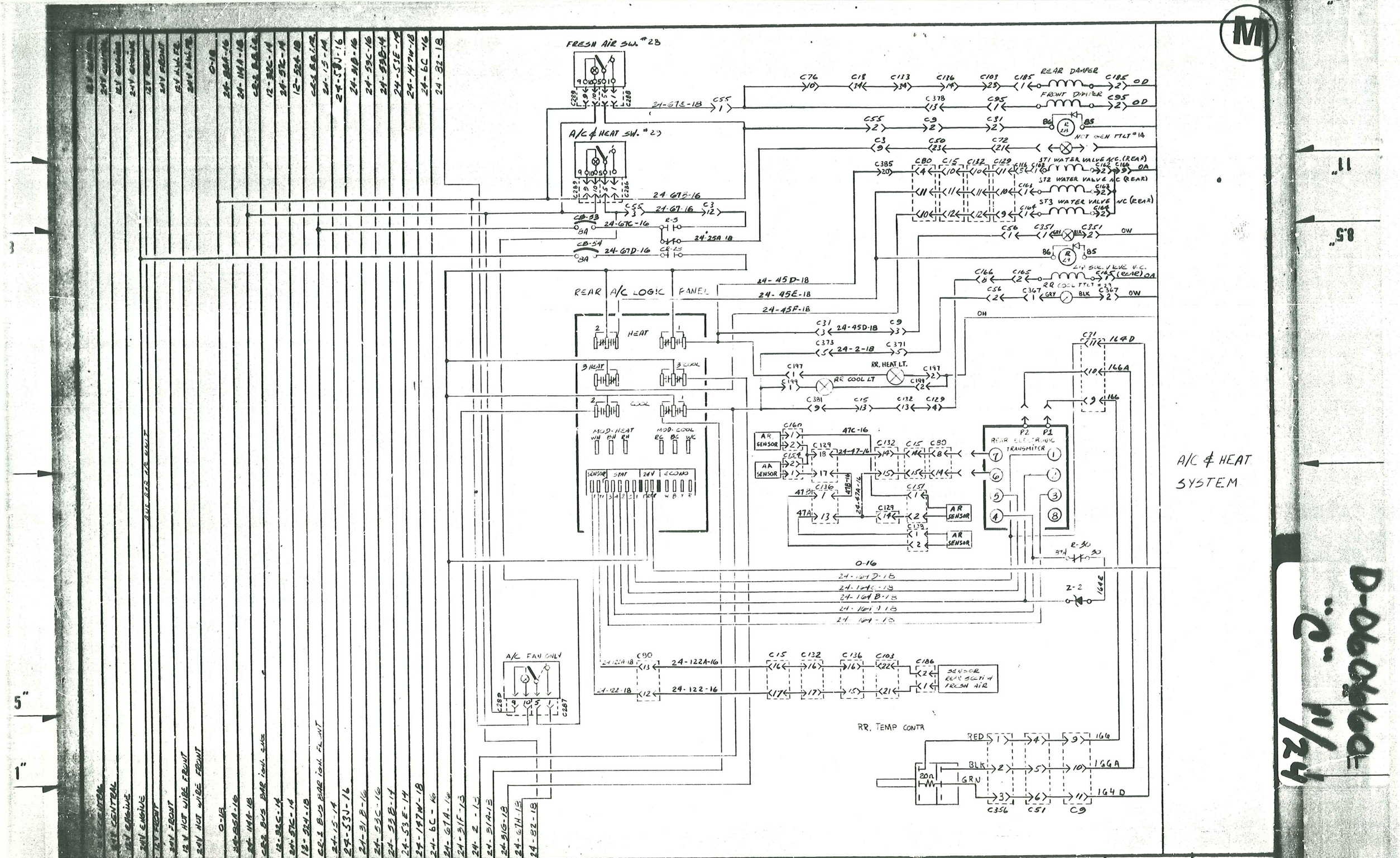

A/C & HEAT SYSTEM

D-060660 "C" 11/84

D	12-88	CD 15802		
C	09-88	C.D.# 15247	O.C.	
B	88-03	Z2 TOURNÉ DE COTÉ	M.L.	
A	88-03	ETAIT /J008	B.C.	
ITEM	DATE	REVISION	PAR	

DESC: WIRING DIAGRAM

DESS: D.T. | DATE: 88-02

VER.: K.C. | APPR.: R.O.

APPL: EFF. W/J009 | REF: H5-60

NO: D-060660 11/84 C

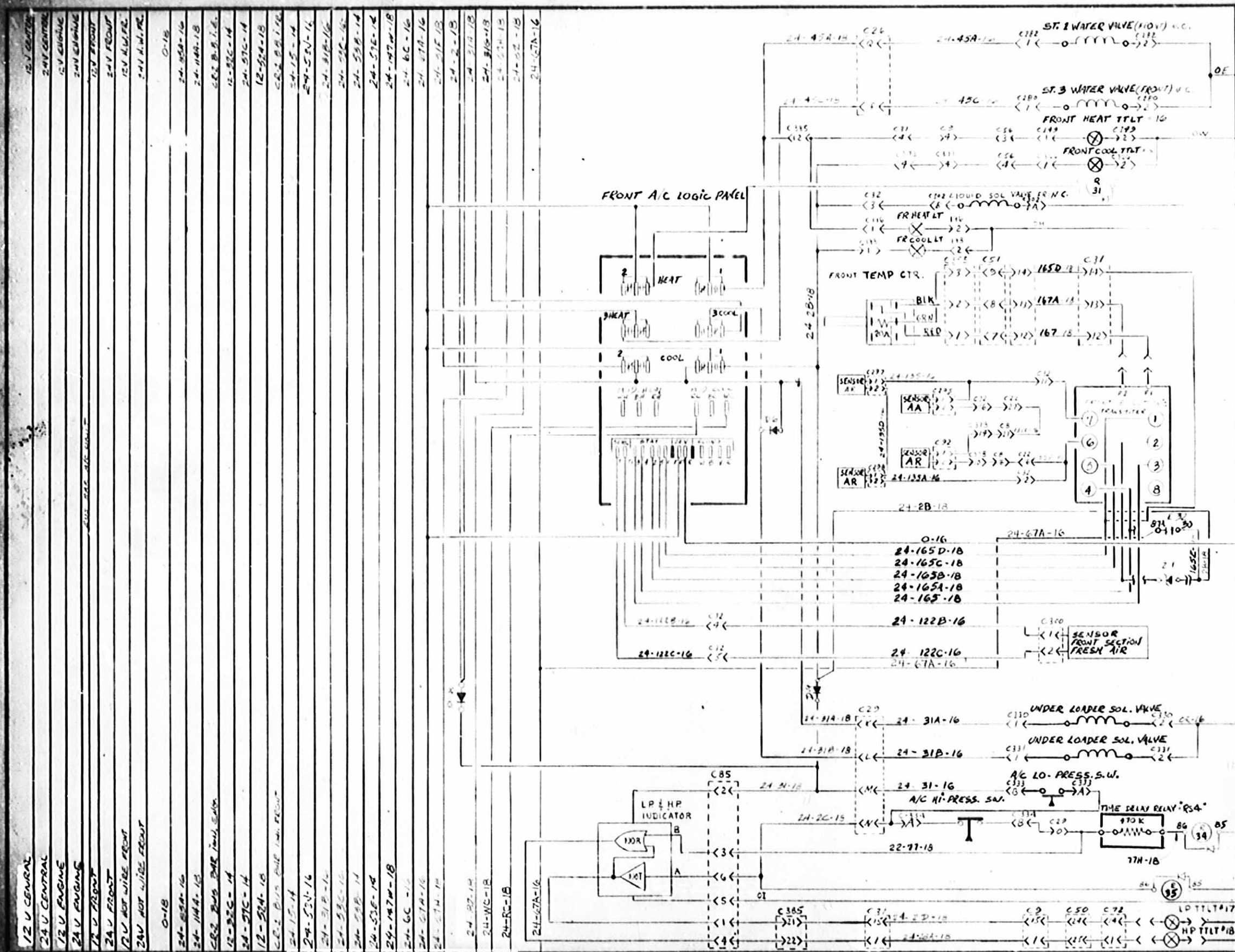

A/C & HEAT SYSTEM

A	89/11	LANCE	SB	DESC: WIRING DIAGRAM	DESS: S.B	DATE: 89/11
					VER.:	APPR.:
ITEM	DATE	REVISION	PAR	APPL: 115-60 VEH EFF. J009 PRIOR TO L035	REF: SPECIAL VOYAGEUR RETROFIT	NO: D-060660 12N/24 C

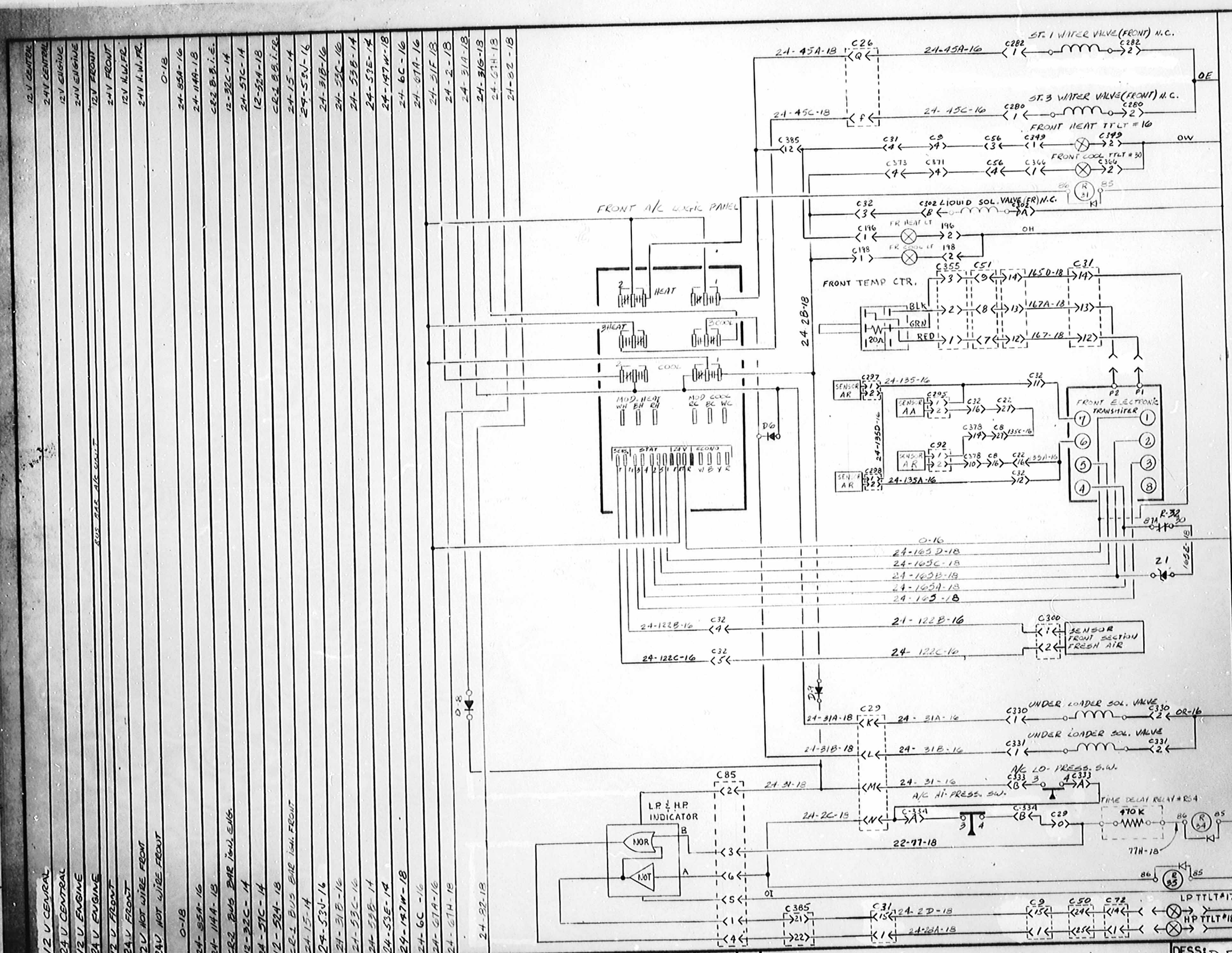

A/C & HEAT SYSTEM

ITEM	DATE	REVISION	PAR
C	09-88	C.D. # 15248	B.C.
B	88-03	Z-1 TOURNER DE COTE'	MZ
A	88-03	ETAIT /J008	B.C

DESC: WIRING DIAGRAM

APPL: EFF. W/J009

REF: H5-60

DESS: D.V. | DATE: 88-02

VER.: C | APPR.:

NO: D-060660 12/24 C

124

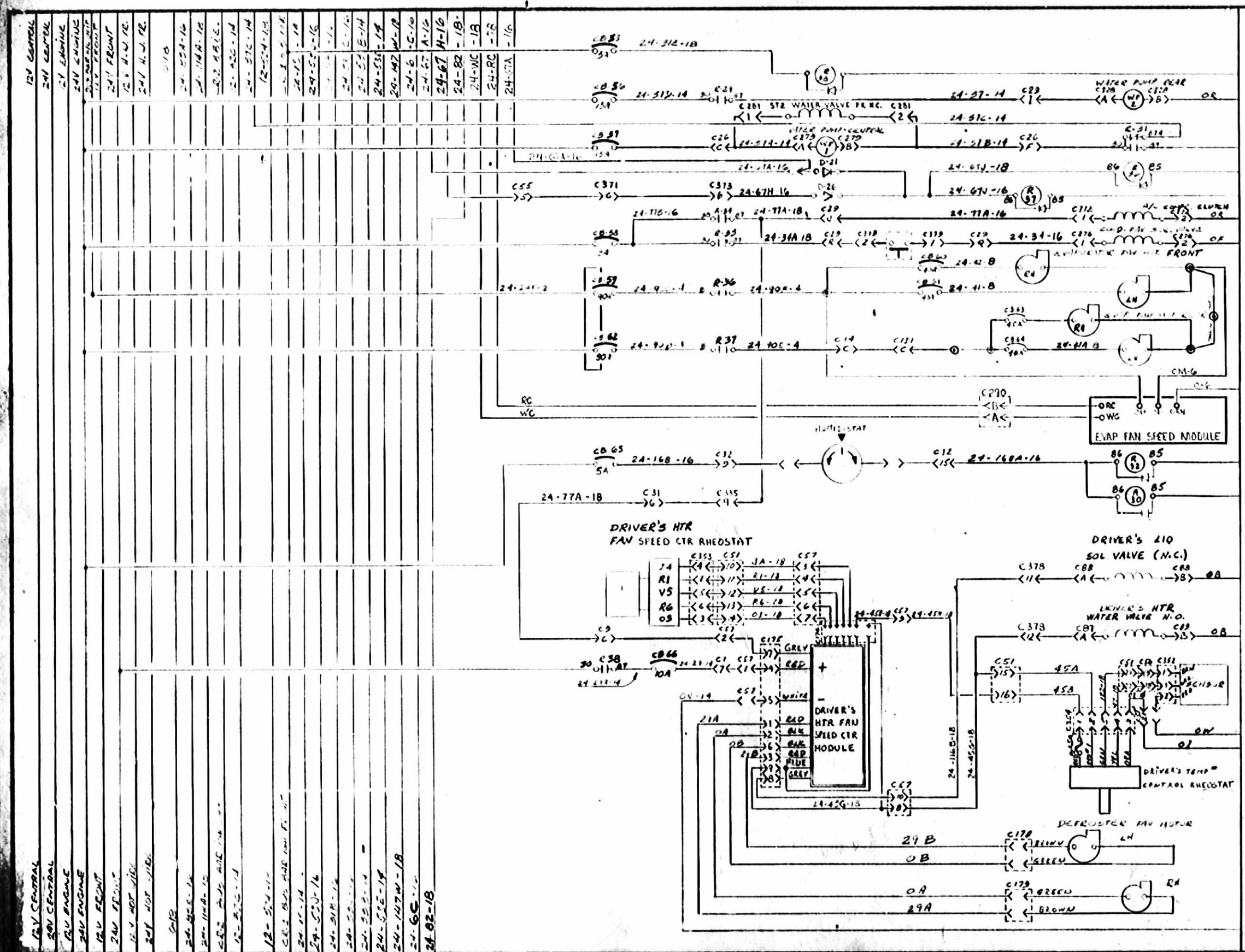

ITEM	DATE	REVISION	PAR
A	89/11	LANCE	S.B.

DESC: WIRING DIAGRAM

DESS: S.B. DATE: 89/11

VER.: 1/c APPR.:

APPL: 115-60 VER EFF J009 PRIOR TO L035 REF: SPECIAL VOYAGEUR RETROFIT

NO: D-060660 13/24 C

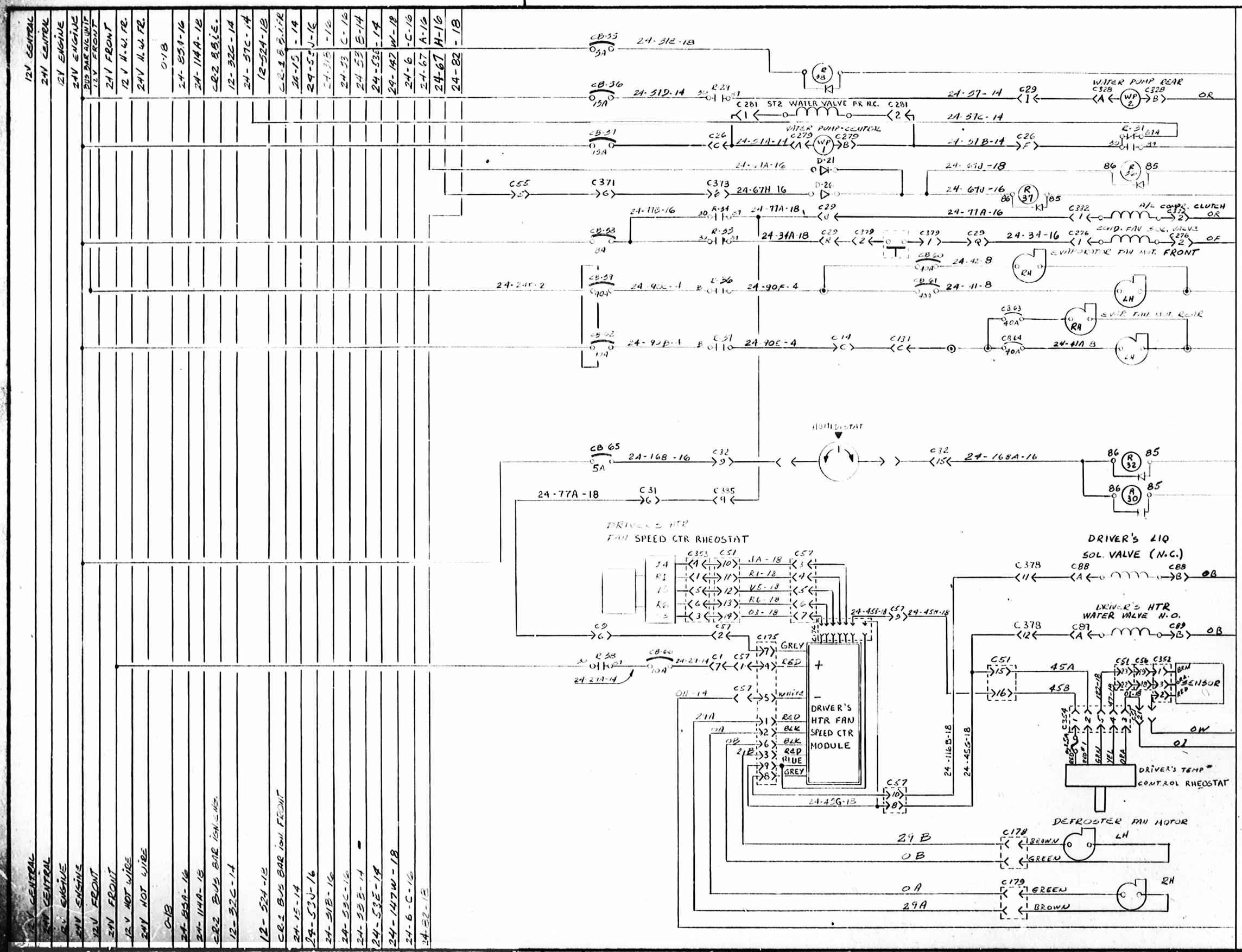

ITEM	DATE	REVISION	PAR
C	88-05	CB65 ETAIT 8A	MJ
B	88-05	MISE A JOUR	BC.
A	88-03	ETAIT /J008	

DESC : WIRING DIAGRAM

APPL: EFF. W/J009 (A)

REF: HS-60

DESS: D.T.

DATE- 88-02

VER.-

APPR.-

NO: D-060660 13/24 C

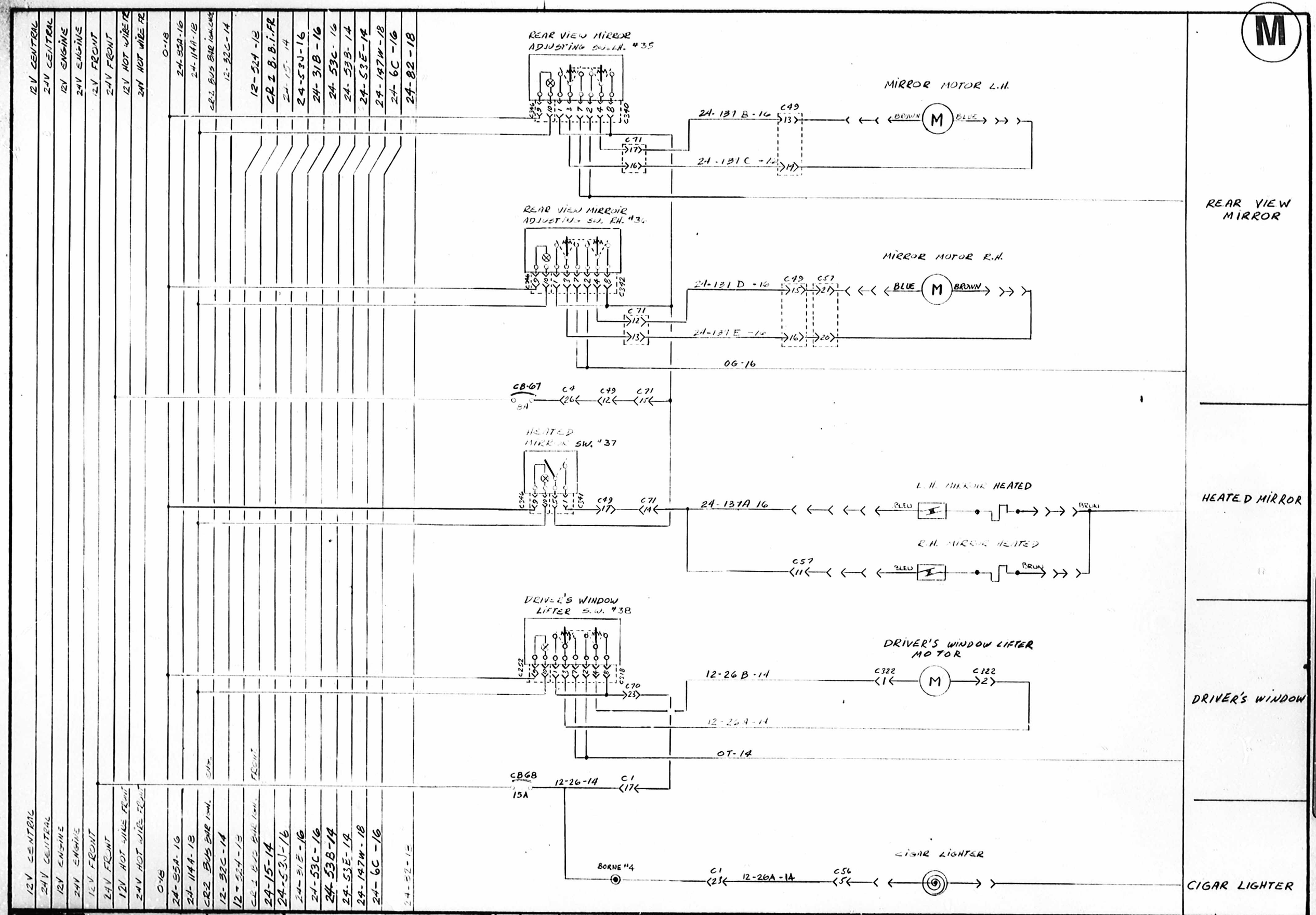

REAR VIEW MIRROR

HEATED MIRROR

DRIVER'S WINDOW

CIGAR LIGHTER

LEGEND

- FRONT JUNCTION PANEL
- REAR JUNCTION PANEL
- BATTERY COMPARTMENT
- CIRCUIT BREAKER
- HARNESS CONNECTOR
- BATTERY JUNCTION BLOCK
- SINGLE CONNECTOR
- DIODE (RECTIFIER)
- OPTION

ITEM	DATE	REVISION	PAR
A	88-03	ETAIT /J008	B.C.

DESC: WIRING DIAGRAM H5-60

APPL: EFF. W/J009 ⚠ REF: H5-60

DESS: D.V. DATE: 88-02

VER.- APPR.-

NO: D-060660 14/24 C

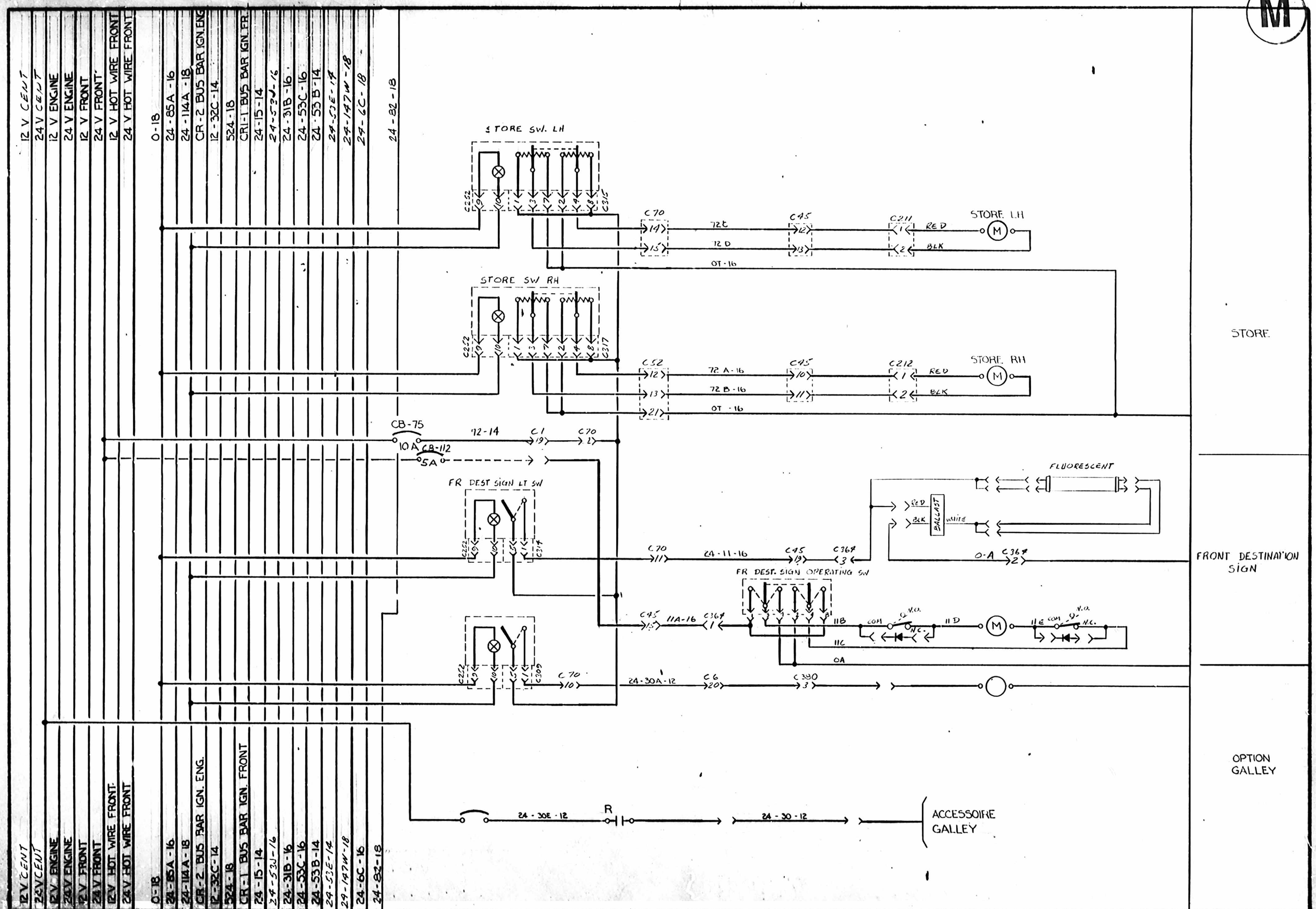

ITEM	DATE	REVISION	PAR
A	88-03	ETAIT /J008	B.C.

DESC: WIRING DIAGRAM H5-60

DESS: D.V. | DATE: 88-02 | VER.- | APPR.-

APPL: EFF. W/J009 | REF: H5-60 | NO: D-060660 | 15/24 | C

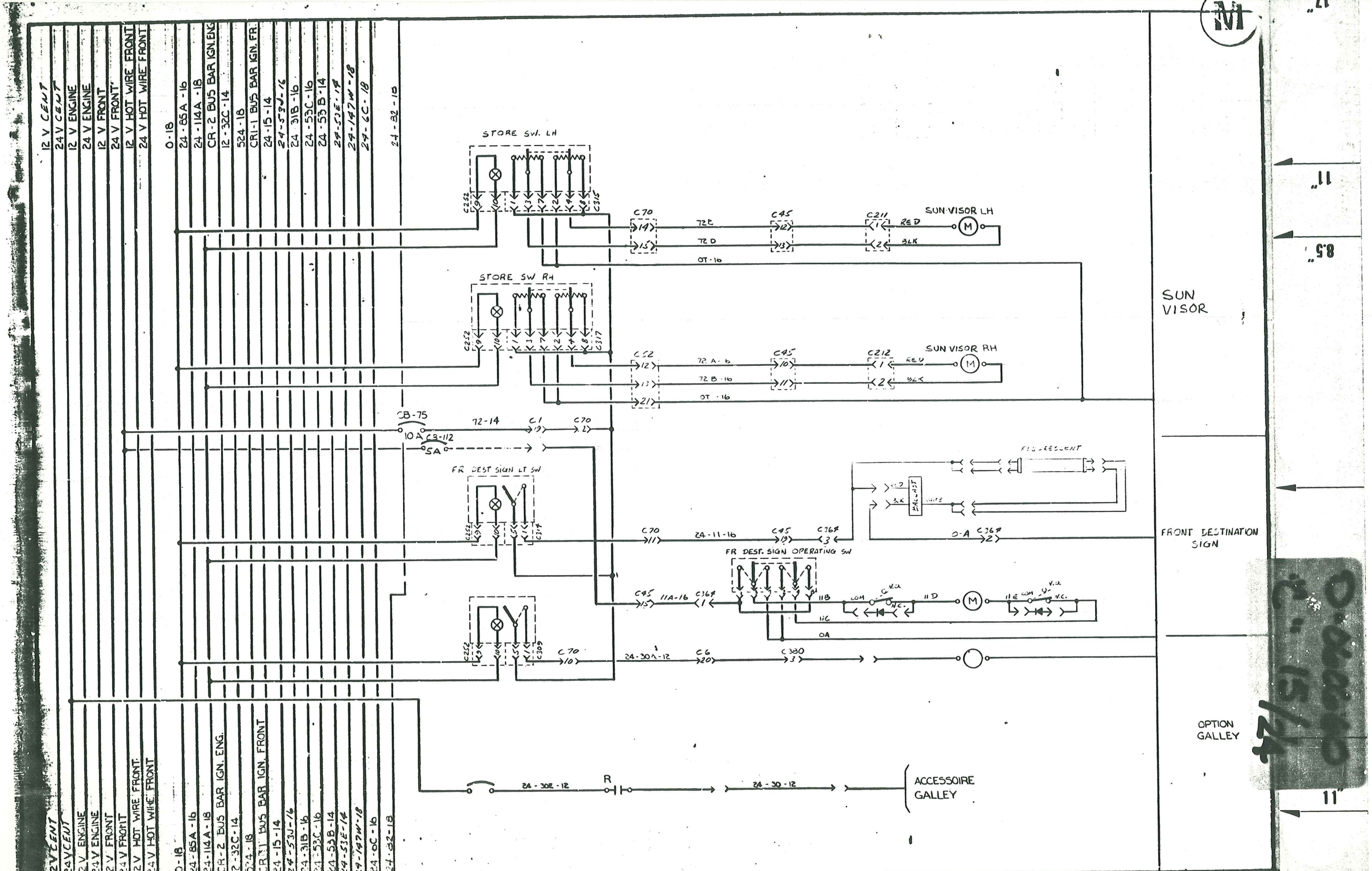
12 V CENT
24 V CENT
12 V ENGINE
24 V ENGINE
12 V FRONT
24 V FRONT
12 V HOT WIRE FRONT
24 V HOT WIRE FRONT
0-18
24-85A-16
24-114A-18
CR-2 BUS BAR IGN. ENG.
12-32C-14
524-18
CR-1 BUS BAR IGN. FR.
24-15-14
24-53J-16
24-31B-16
24-53C-16
24-53B-14
24-53E-18
24-147W-18
24-6C-18
24-32-18
STORE SW. LH
STORE SW RH
C252
C315
C317
C309
C70
C45
C211
C212
C52
SUN VISOR LH
SUN VISOR RH
72E
72D
OT-16
72 A-16
72 B-16
CB-75
10 A
CB-112
5A
72-14
C1
FR DEST SIGN LT SW
24-11-16
C36*
FLUORESCENT
BALLAST
BLK
WHITE
0-A
FR DEST. SIGN OPERATING SW
11A-16
11B
11C
11D
11E
COM
N.C.
N.O.
24-30A-12
C6
C380
24-30E-12
R
24-30-12
ACCESSOIRE GALLEY
SUN VISOR
FRONT DESTINATION SIGN
OPTION GALLEY
LEGEND
BATTERY JUNCTION BLOCK
SINGLE CONNECTOR
DIODE RECTIFIER
OPTION
DESC: WIRING DIAGRAM
DESS: D.V.
DATE- 88-02
VER.- C
APPR.-
APPL: EFF. W/J009 ⚠ PRIOR L034
REF: H5-60
NO: D-060660
C
B 91/10 SUN VISOR ETAIT STORE
A 88-03 ETAIT 1J008
ITEM DATE REVISION
PAR

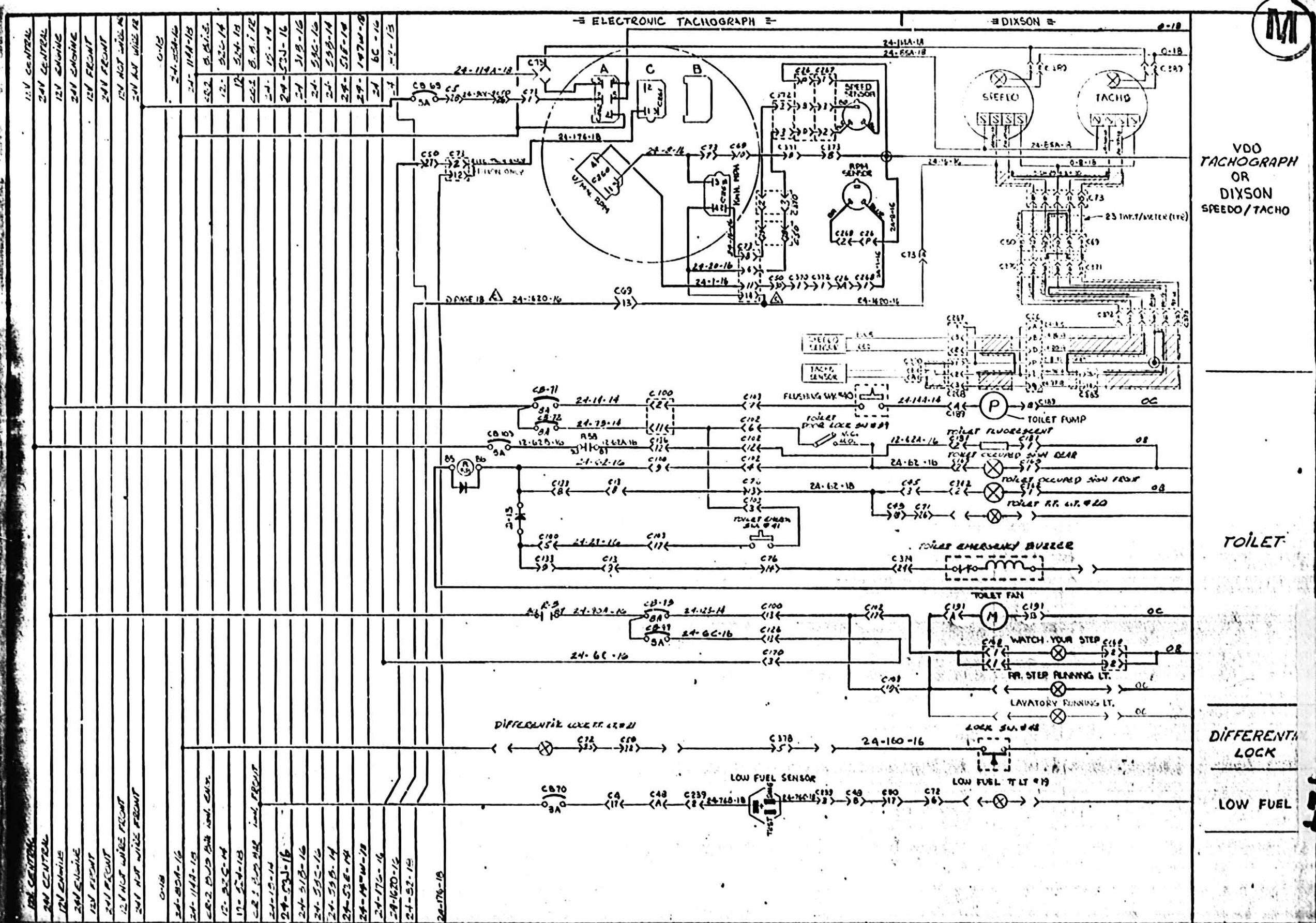

LEGEND

FRONT JUNCTION PANEL	BATTERY JUNCTION BLOCK
REAR JUNCTION PANEL	SINGLE CONNECTOR
BATTERY COMPARTMENT	DIODE (RECTIFIER)
CIRCUIT BREAKER	OPTION
HARNESS CONNECTOR	

ITEM	DATE	REVISION	PAR
B	91/02	MISE A JOUR	MJ
A	88/10	LANCE OC # 88165	MJ

DESC: WIRING DIAGRAM

APPL: EFF. W/ K020 PRIOR L033 — REF: HS-60

DESS: D.T. — DATE: 88-02 — VER.: C — APPR.: — NO: D-060660 — 16A/24 — C

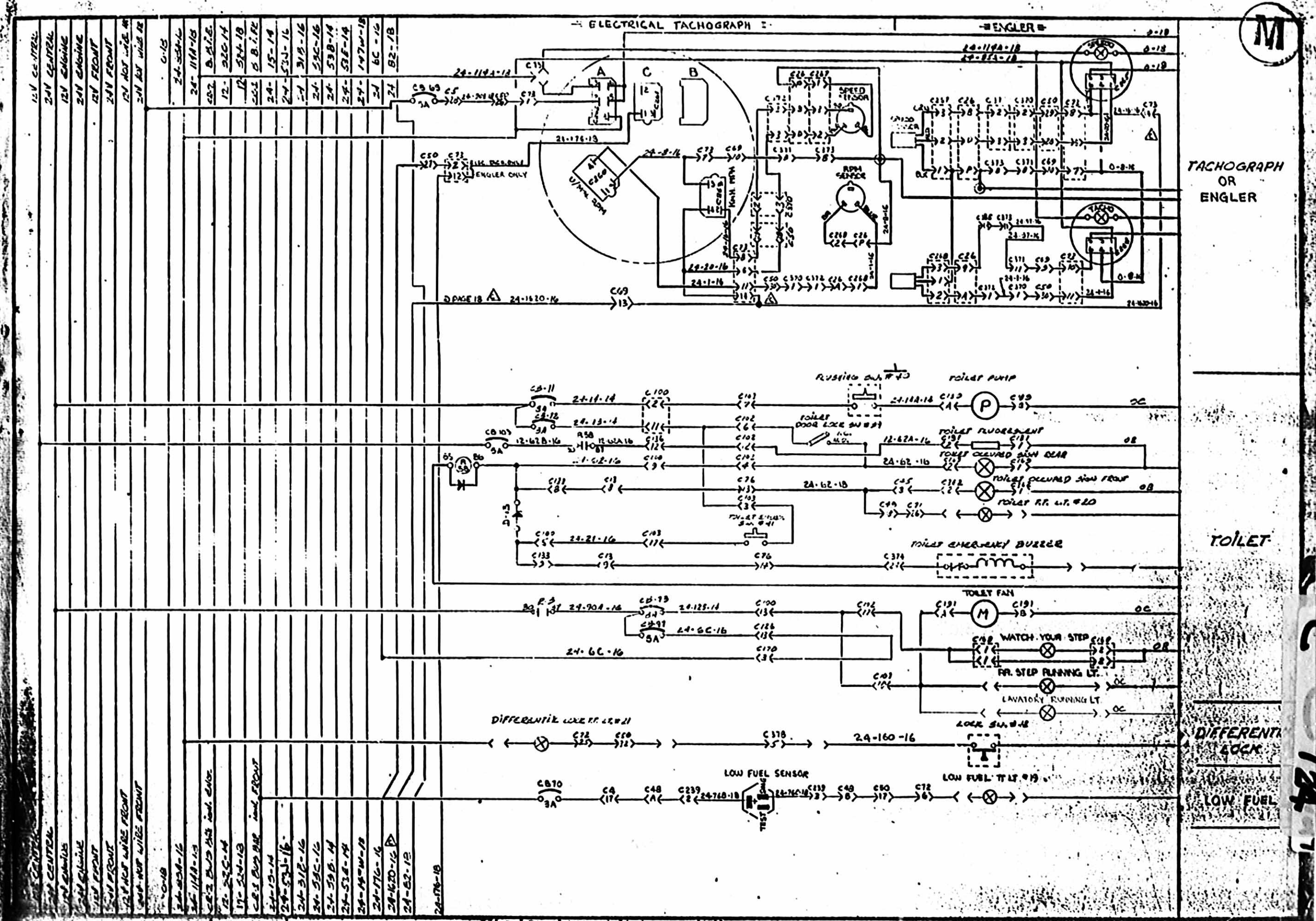
ELECTRICAL TACHOGRAPH
ENGLER
TACHOGRAPH OR ENGLER
SPEED SENSOR
RPM SENSOR
TACHO
TOILET
TOILET PUMP
TOILET FLUORESCENT
TOILET OCCUPIED SIGN REAR
TOILET OCCUPIED SIGN FRONT
TOILET R.R. LT. #20
TOILET EMERGENCY BUZZER
TOILET FAN
WATCH YOUR STEP
RR. STEP RUNNING LT.
LAVATORY RUNNING LT.
DIFFERENTIAL LOCK
LOW FUEL SENSOR
LOW FUEL TT LT. #19
DESC : WIRING DIAGRAM
DESS D.T.
DATE 88-02
VER.
APPL 1 EFF. W/J009
REF. HS-605
NO D-060660

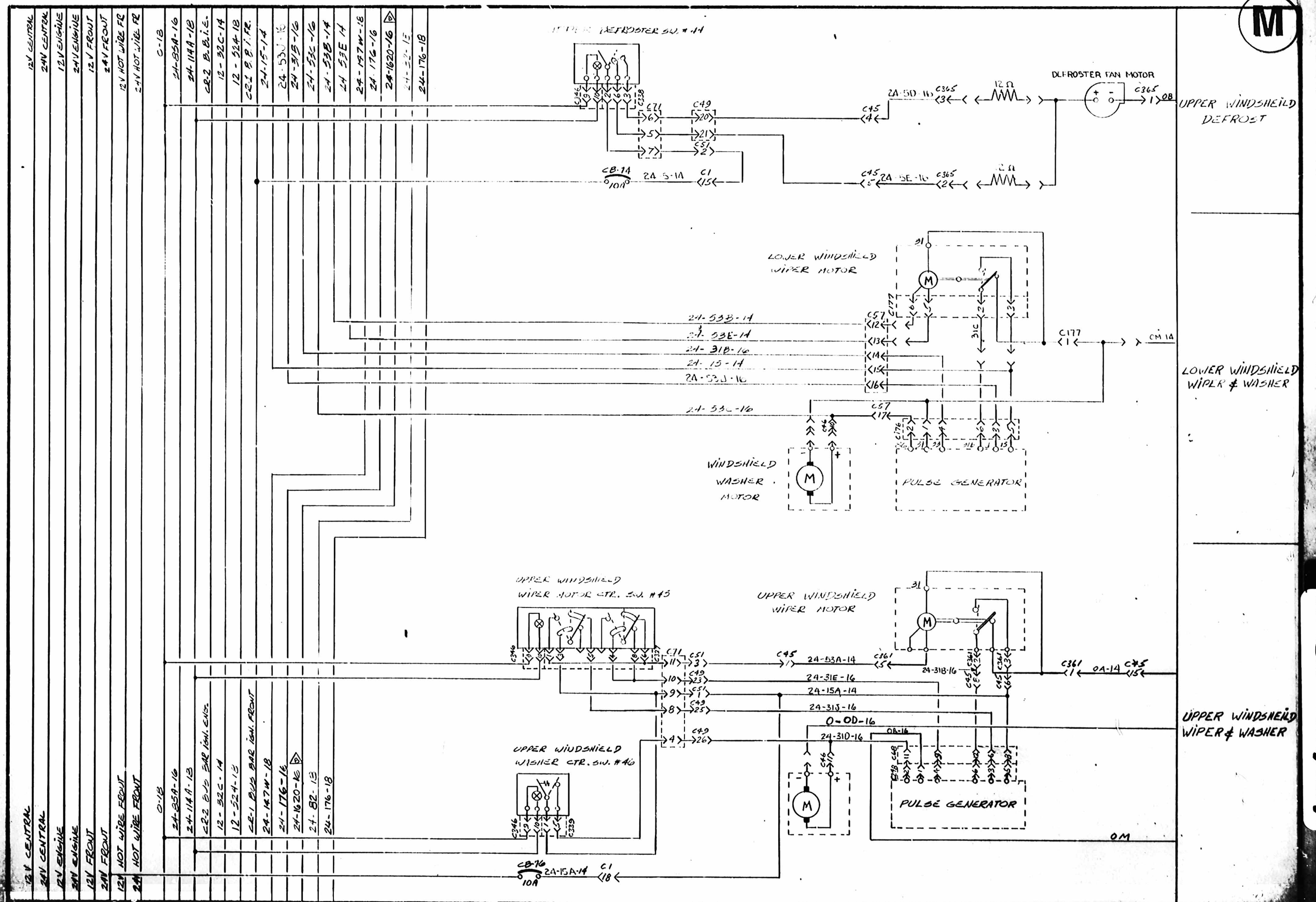

ITEM	DATE	REVISION	PAR
C	88-05	FIL 24-176-18 AJOUTÉ	Ml
B	88-05	MISE A JOUR	Ml
A	88-03	ETAIT /J008	B.C.

DESC : WIRING DIAGRAM

APPL: EFF. W/J009 ⚠

REF: HS-60

DESS: D.V.

VER.-

DATE- 88-02

APPR.-

NO: D-060660 17/24

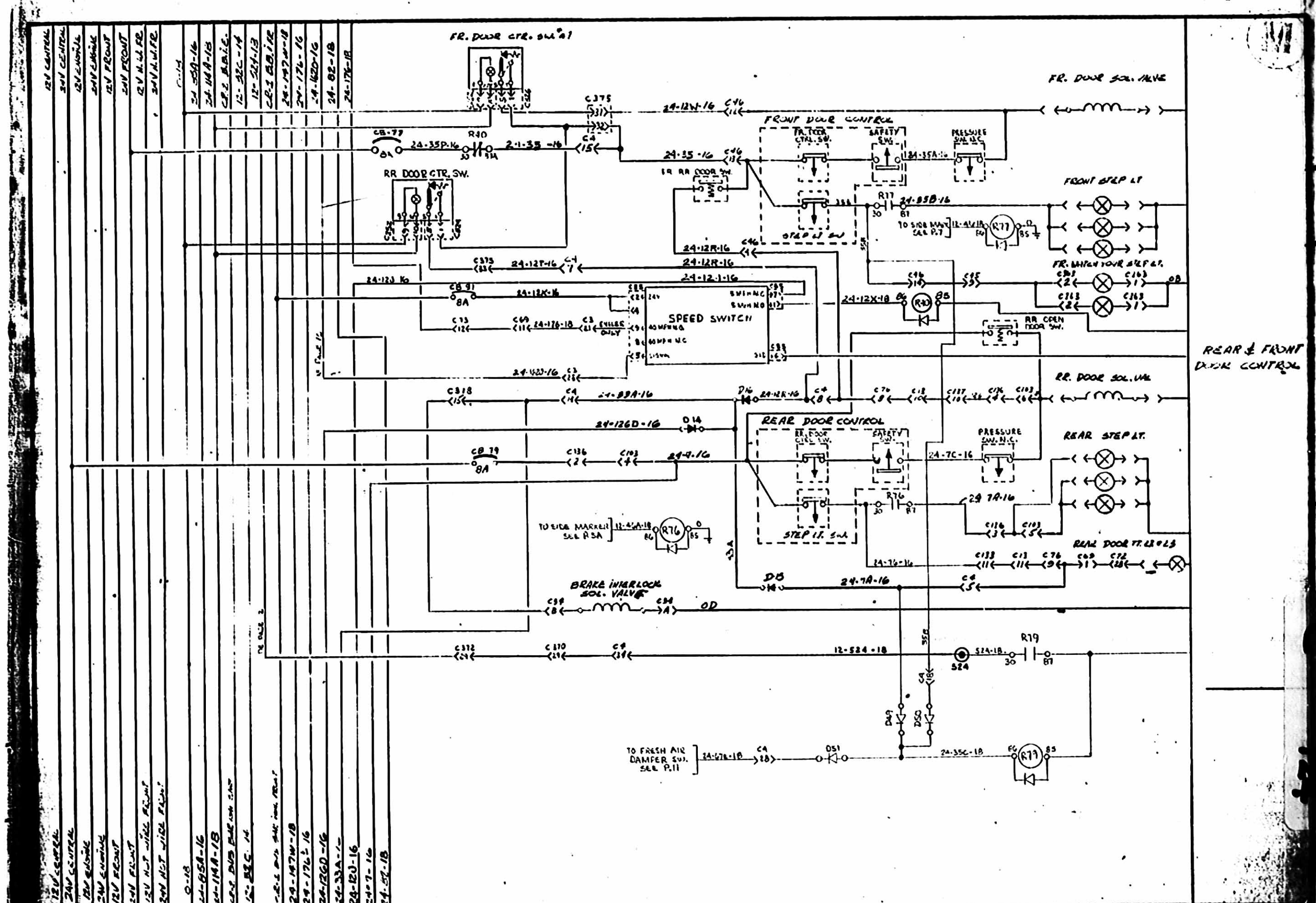

LEGEND

TEM	DATE	REVISION	PAR
B	90-11	R76, R77 & R79 ADDITES.	MV
	90-08	C.D.# 19807	DT
A	89/10	LANCE	MZ

DESC: WIRING DIAGRAM SPECIAL VOYAGEUR

APPL: EFF. W/J009 PRIOR L034 REF: HS-60

DESS'K: MZ DATE: 89/10 VER: C NO: D-060660 18 1/24

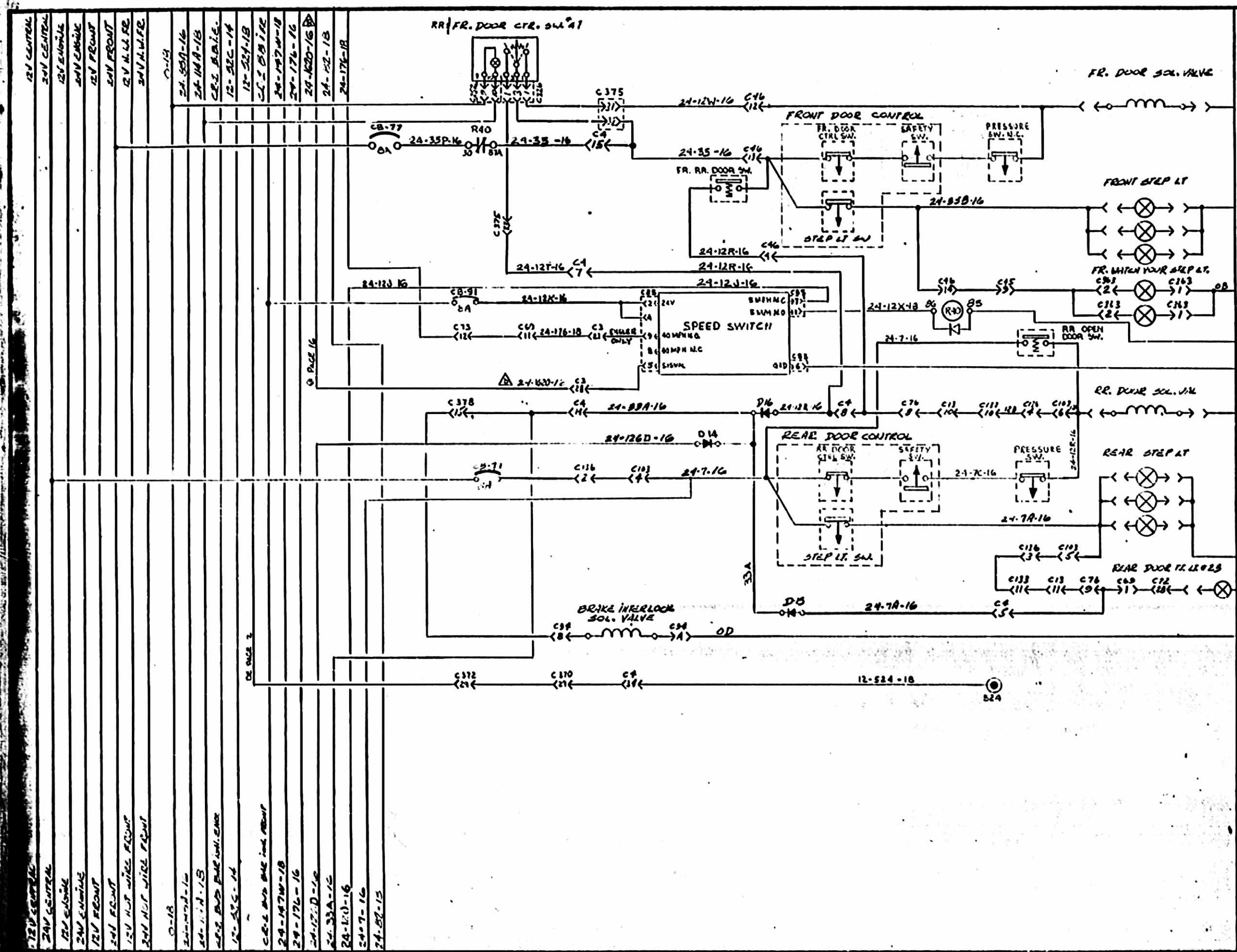

LEGEND

TEM	DATE	REVISION	PAR
D	90-08	C.D. # 19807	DV
C	88-11	C.D. # 15700 OC # 88157	GC
B	88-03	MISE Ø JOUR	MA
A	88-03	ETAIT /J008	BC

DESC: WIRING DIAGRAM

APPL: EFF. W/J009 △ PRIOR L039

REF: HS-60

DESS: D.V.

VER: LC

DATE: 88-02

NO: D-060660

18/24

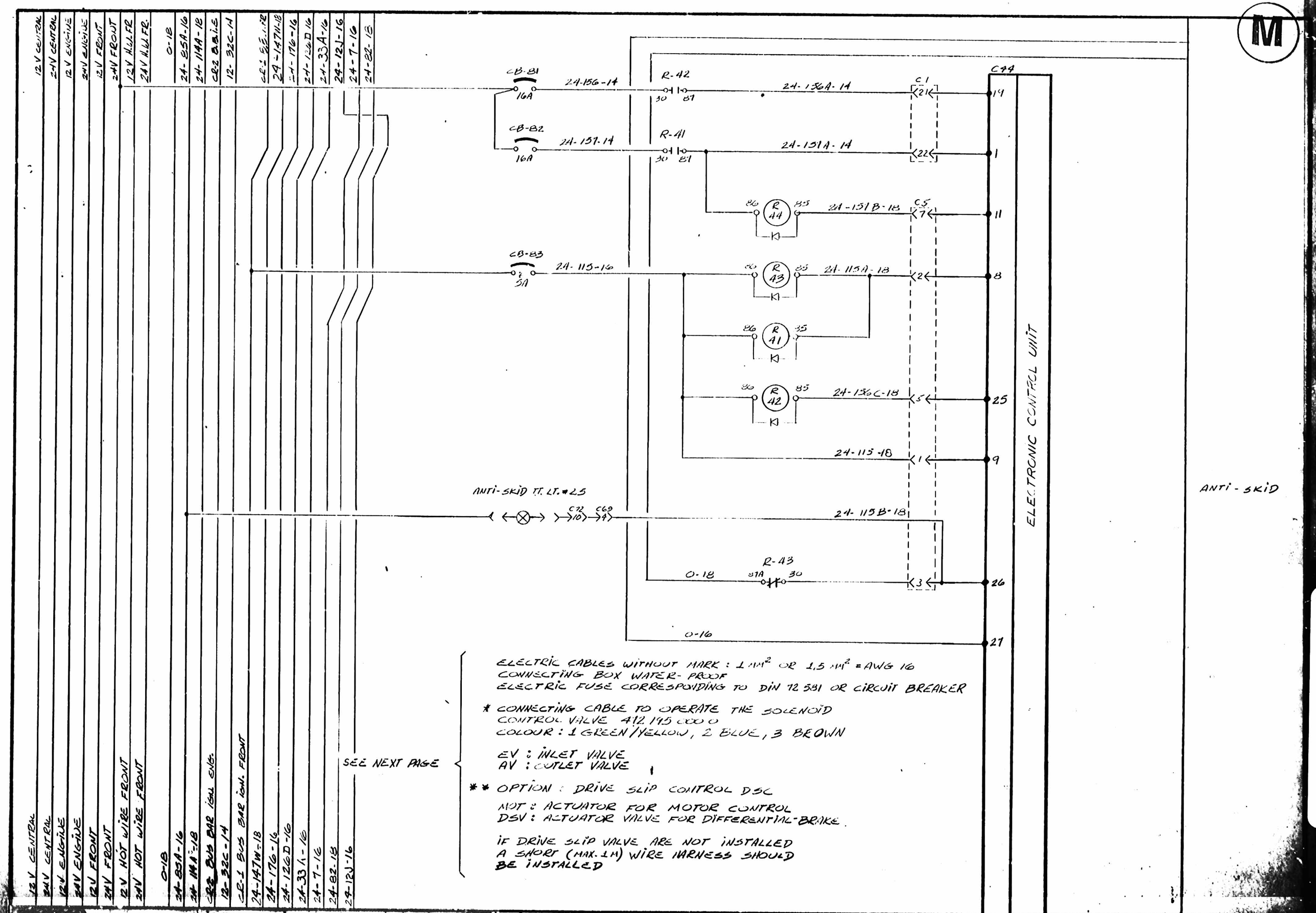

ELECTRIC CABLES WITHOUT MARK : 1 MM² OR 1,5 MM² = AWG 16
CONNECTING BOX WATER-PROOF
ELECTRIC FUSE CORRESPONDING TO DIN 72 581 OR CIRCUIT BREAKER

* CONNECTING CABLE TO OPERATE THE SOLENOID CONTROL VALVE 412 195 000 0
COLOUR : 1 GREEN/YELLOW, 2 BLUE, 3 BROWN

EV : INLET VALVE
AV : OUTLET VALVE

** OPTION : DRIVE SLIP CONTROL DSC
MOT : ACTUATOR FOR MOTOR CONTROL
DSV : ACTUATOR VALVE FOR DIFFERENTIAL-BRAKE.

IF DRIVE SLIP VALVE ARE NOT INSTALLED
A SHORT (MAX. 1M) WIRE HARNESS SHOULD BE INSTALLED

SEE NEXT PAGE

12 V CENTRAL
24V CENTRAL
12V ENGINE
24V ENGINE
12V FRONT
24V FRONT
12 V HOT WIRE FRONT
24V HOT WIRE FRONT
0-18
24-85A-16
24-114A-18
CR2 BUS BAR IGN. ENG.
12-32C-14
CR-1 BUS BAR IGN. FRONT
24-147H-18
24-176-16
24-126D-16
24-33A-16
24-7-16
24-82-18
24-12J-16

LEGEND

ITEM	DATE	REVISION	PAR
B	88-06	24-GC-16 enlevé	ML
A	88-03	ETAIT 1J008	BC

DESC : WIRING DIAGRAM

DESS: D.T.
VERI: RC
DATE: 88-02

APPL: EFF. W/J009 A
REF: H5-60
NO. D-060660 19/24 C

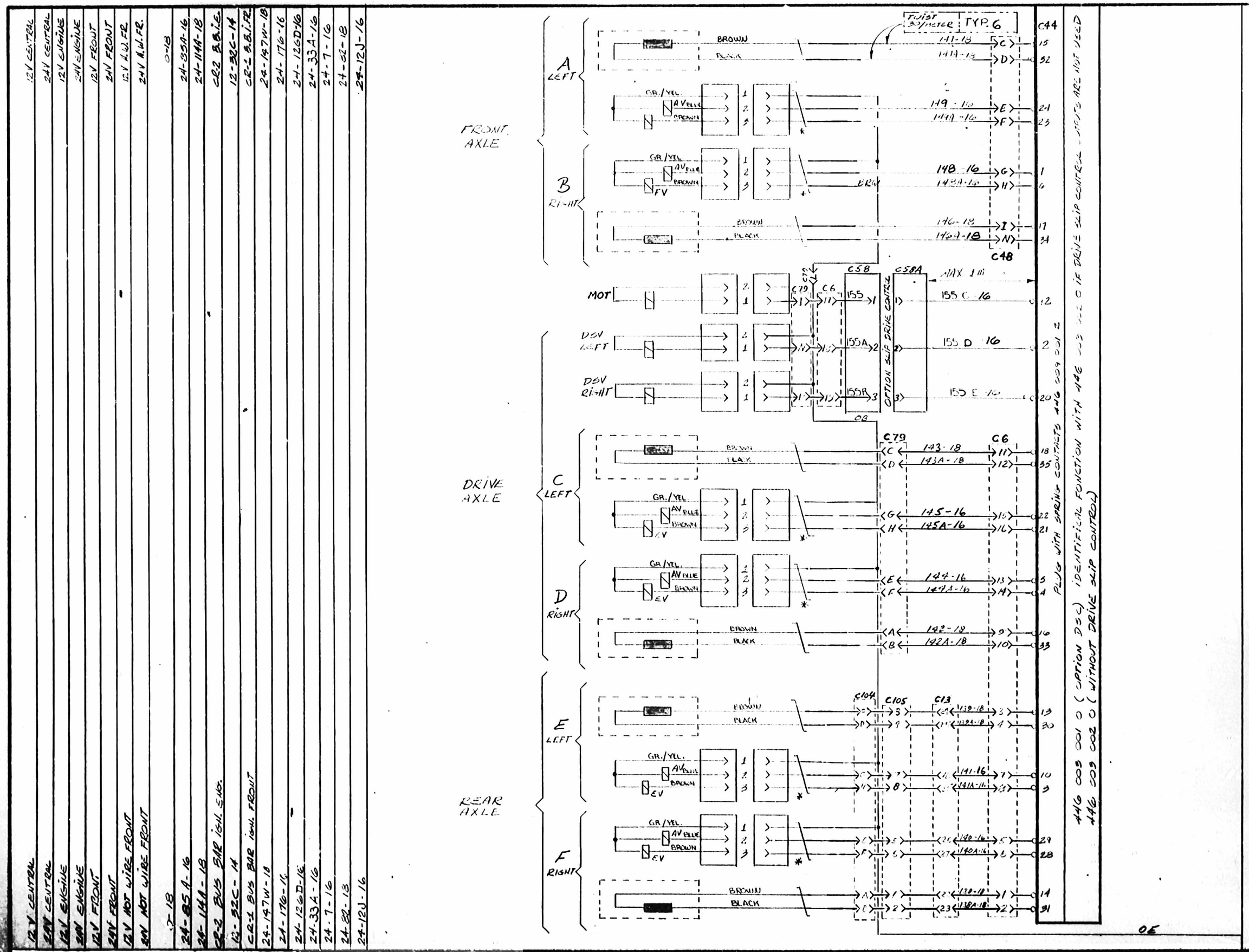

ANTI-SKID

ITEM	DATE	REVISION	PAR
C	88-10	CD # 15359	MJ
B	88-06	24-6C-16 ENLEVÉ	MJ
A	88-03	ETAIT /J008	BC.

DESC : WIRING DIAGRAM

APPL: EFF. W/J009 (A)

REF: H5-60

DESS: D.V.

DATE: 88-02

VER.: Kc

APPR.: M

NO: D-060660 20/20 C

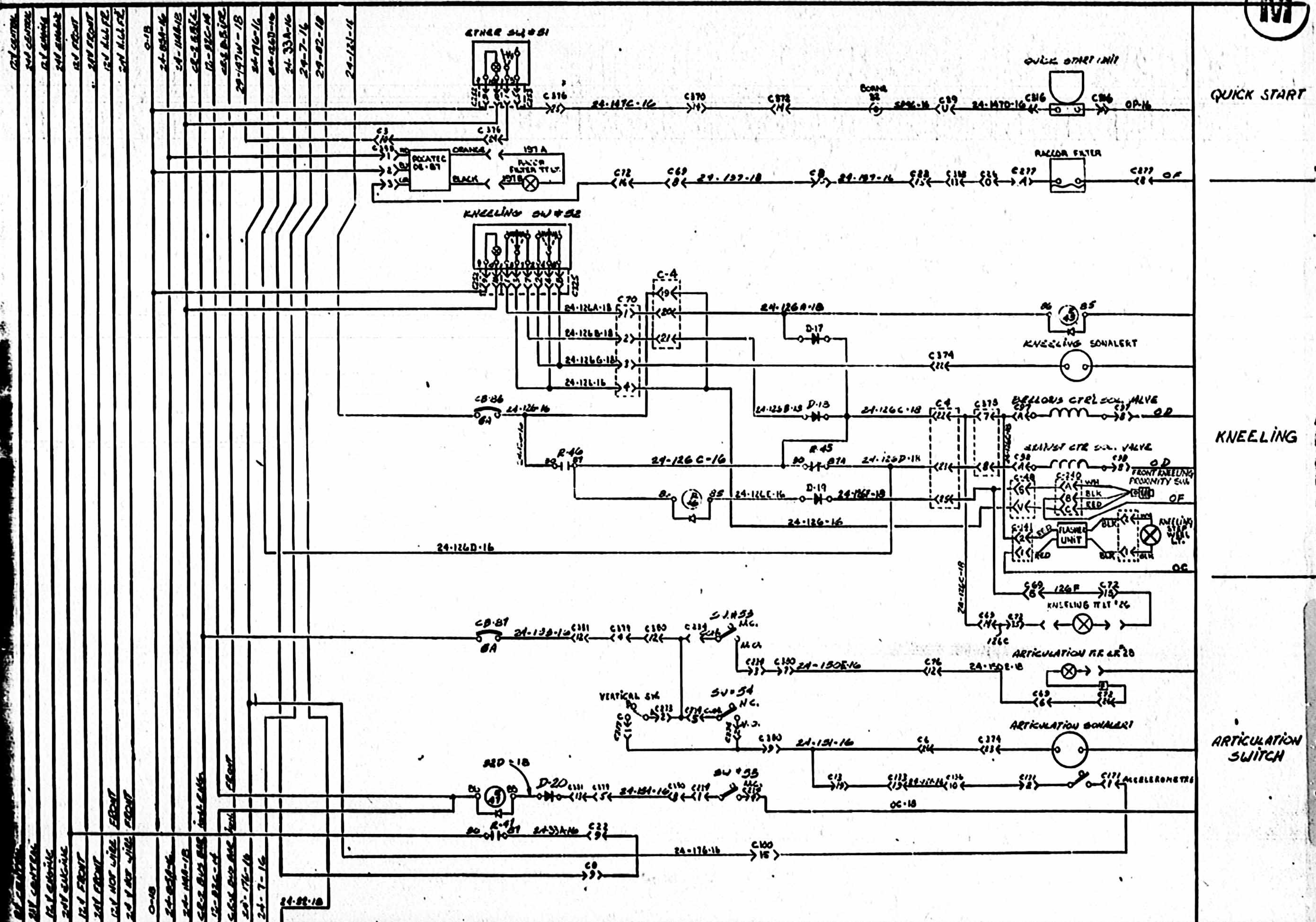

D	90-07	O.C.#90124, C.D.#19608	F.R.
C	89-02	C.D.#16145, O.C.#89031	R.b
B	88-06	1/2 REMPLACE 6C	M.J.
A	88-03	ETAIT /J008	B.C.
ITEM	DATE	REVISION	PAR

DESC: WIRING DIAGRAM

DESS: D.T. DATE- 88-02

VER.- APPR.-

APPL: EFF. W/J008 A PRIOR L034

REF: H5-60

NO: D-060660 21/24 C

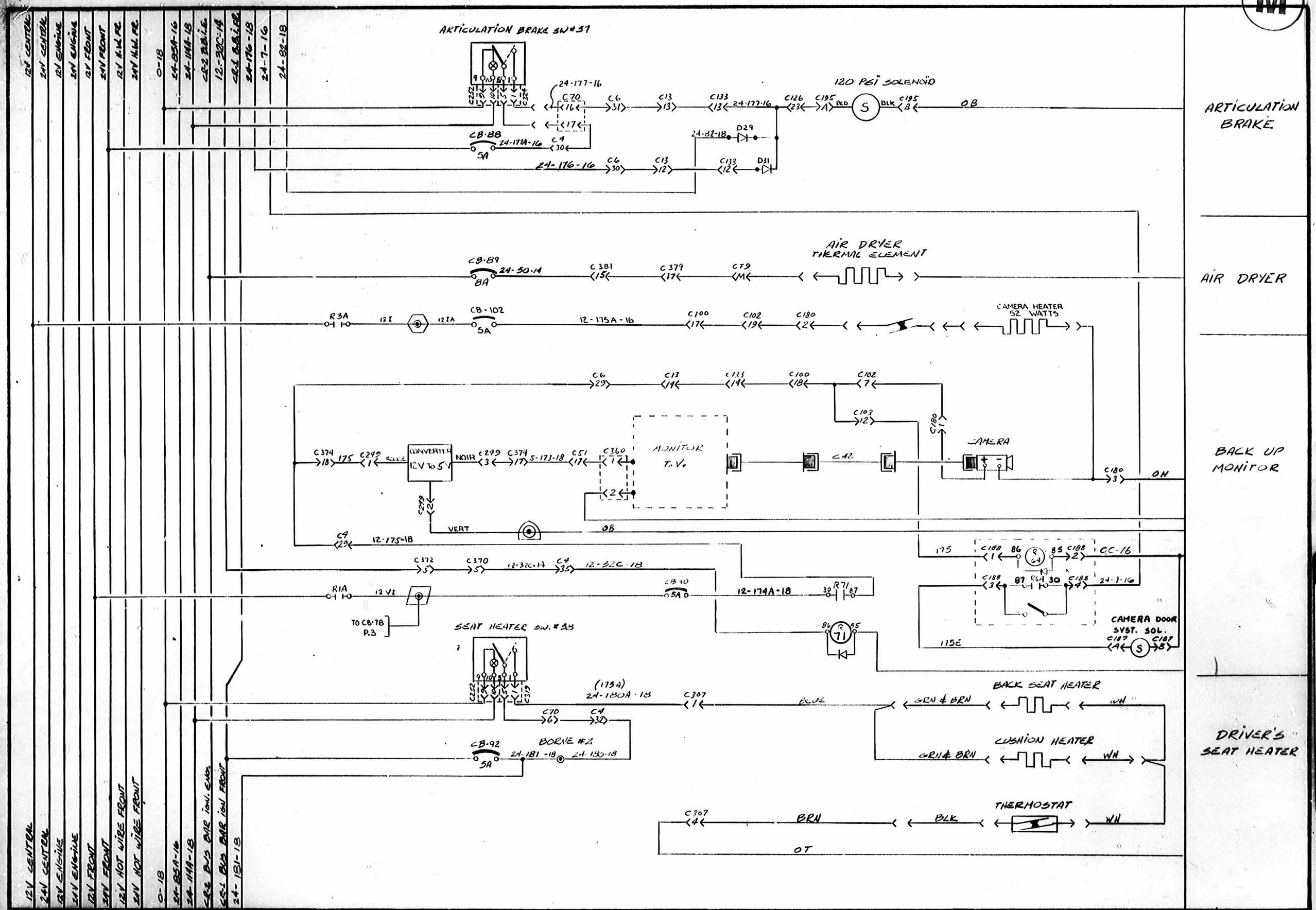

LEGEND	
FRONT JUNCTION PANEL	BATTERY JUNCTION BLOCK
REAR JUNCTION PANEL	SINGLE CONNECTOR
BATTERY COMPARTMENT	DIODE (RECTIFIER)
CIRCUIT BREAKER	OPTION
HARNESS CONNECTOR	

ITEM	DATE	REVISION	PAR
C	89-02	O.C.#89033, C.D.#16158	Rob.
B	88-06	MISE A JOUR	M.J.
A	88-03	ETAIT /J008	B.C.

DESC : WIRING DIAGRAM

APPL: EFF. W/J009 △ REF: H5-60

DESS: D.V. DATE- 88-02

VER.- APPR.-

NO: D-060660 22/24 C

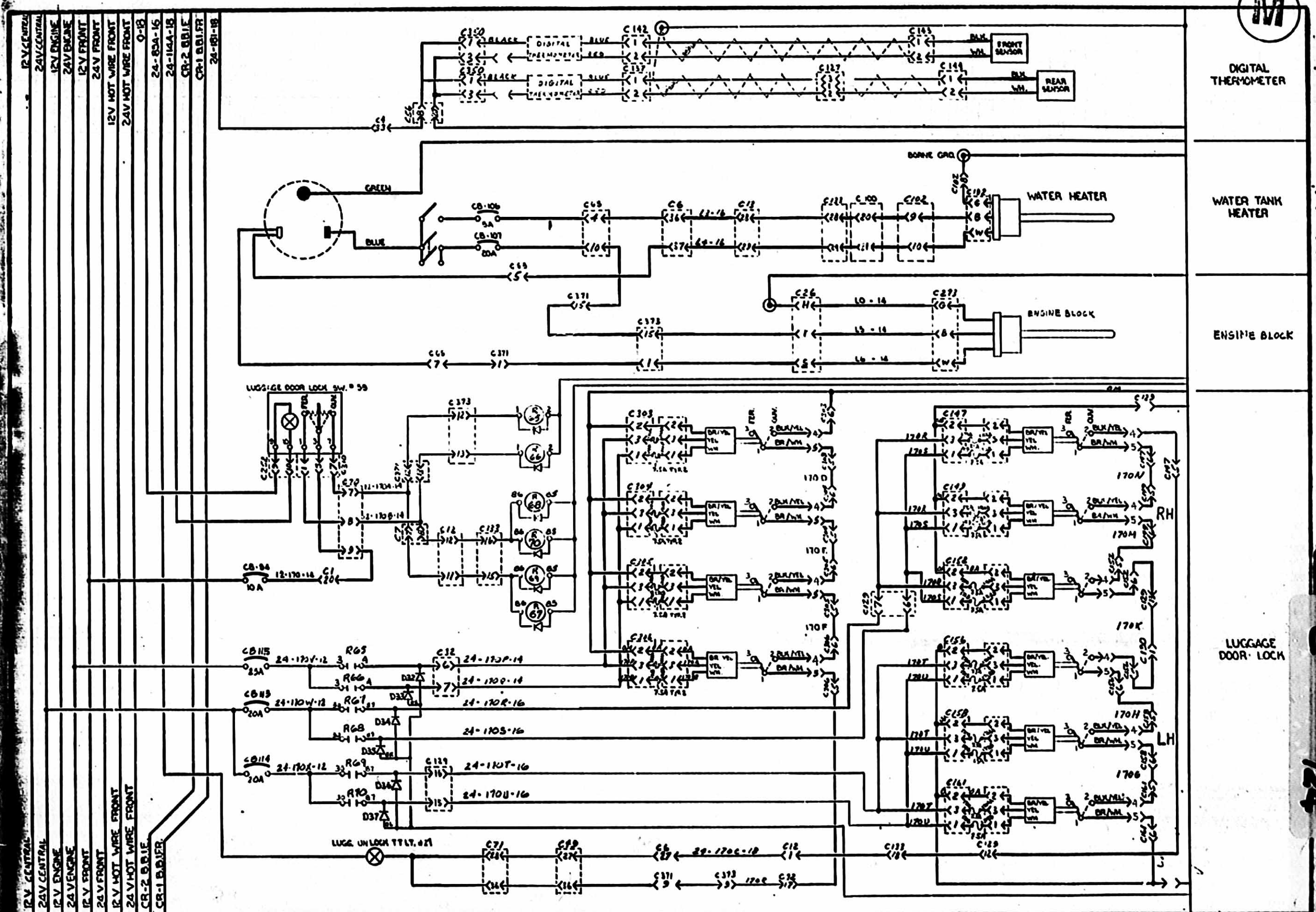

PREVOST

LEGEND

FRONT JUNCTION PANEL	BATTERY JUNCTION BLOCK
REAR JUNCTION PANEL	SINGLE CONNECTOR
BATTERY COMPARTMENT	DIODE (RECTIFIER)
CIRCUIT BREAKER	OPTION
HARNESS CONNECTOR	

ITEM	DATE	REVISION	PAR
E	91-01	MISE A JOUR	ML
D	89-01	D32 & D37 AJOUTES OC# 89012	ML
C	88-07	O.C. 88120 CD# 14680	BC
B	88-03	CD # 13579	AB
A	88-03	ÉTAT. J008 , DEVENT J009	BC

DESC : WIRING DIAGRAM

APPL: EFF. W/J020 △A △B PRIOR L033

REF: H5-60

DESS: D.T.

VER.- Kc

DATE- 88-02

APPR.-

NO: D-060660 23/24 C

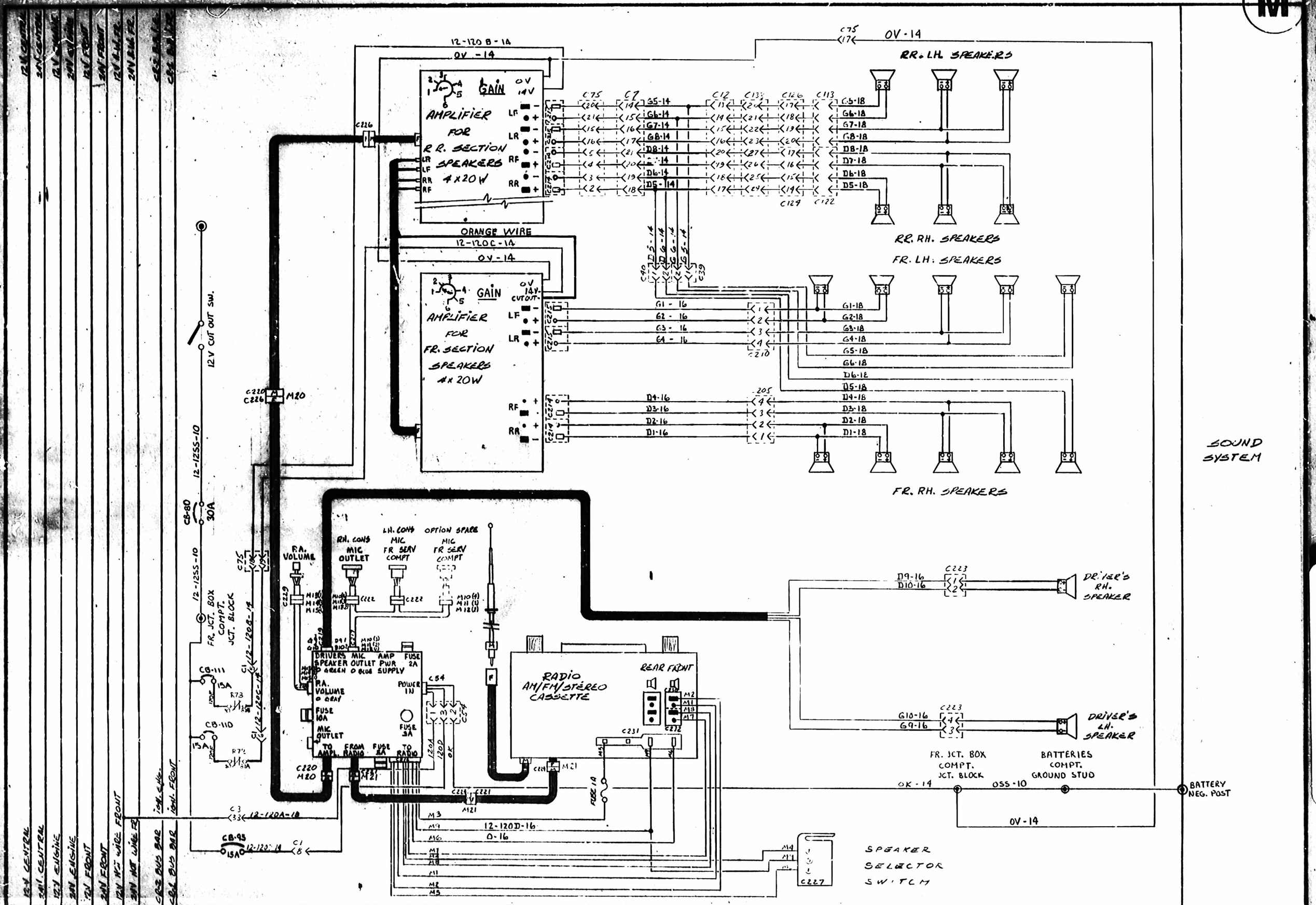

SOUND SYSTEM

LEGEND

ITEM	DATE	REVISION	PAR
D	88/08	CD # 14833	MC
C	88/08	CD #14 762	B.C.
B	88/03	C.D. # 13753	B.C.
A	88/03	R72 & R73 ADJUSTES	MC

DESC: WIRING DIAGRAM

APPL: EFF. W/J009

REF: HS-60

DESS: D.V

VER.- Lc

DATE- 88-02

APPR.- KK

NO: D-060660 24/24 C